ORAKÇI
Makina San. ve Tic. A.Ş.

KONTROLSÜZ KOPYA

ORAKÇI
Machinery Industry Co.

ORV

HYDRAULIC PRESSED GARBAGE COMPACTOR

Yayım Tarihi: 02/01/2020 **Revizyon:** 00 **TS EN 1501-1**

KONTROLSUZ KOPYA

ALL RIGHTS OF THE MANUAL BELONGS TO ORAKÇI MAKİNA İMALAT İTH. İHR. SAN. VE TİC. A.Ş. COPYING, QUOTING OR THE COMMERCIAL USE OF THE INFORMATION IN THE MANUAL IS PROHIBITED WITHOUT THE WRITTEN PERMISSION OF ORAKÇI MACHINERY

CONTENTS

1. GENERAL INFORMATION....9
1.1 Preface....9
1.2 Description of Parts Lists....9
1.3 SPARE PARTS SUPPLY METHOD....10
2.TERMINOLOGY....11
2.1 Body....12
2.2 EJECTOR PLATE....13
2.3 Tailgate....13
2.4 Oil Tank....14
2.5 Waste Water Tank (Optional)....14
2.6 Bicycle Barrier (Optional)....14
2.7 Mud Guard (Optional)....15
2.8 Slide and Packer System....15
2.9 Bin Lifter (Optional)....15
2.10 Skiploader Group (Optional)....16
2.10.1 Skiploader Booms....16
2.10.2 Skiploader Stabilizer....16
2.11 Crane (Optional)....16
2.12 Tailgate Support (Optional)....16
2.13 Steps (Optional)....16
2.14 Hopper Extension (Optional)....17
2.15 Container Opener Bar & Bin Stopper (Optional)....17
2.16 Rail Barrier (Optional)....17
3.CONDITIONS OF ASSEMBLY....18
3.1 On Vehicle Installation Conditions....18
3.1.1 Bracket Connection Installation....22
3.1.2 On-Vehicle Hydraulic Connections....29
3.1.2.1 The joints are marked on the hydraulic components as shown below....31
3.1.3 Pneumatic Connections....31
3.1.4 Electrical Connections....32
3.1.5 On-Vehicle Mudguard Installation (Optional)....32
3.1.6 On-vehicle Wastewater Tank Installation (Optional)....33

KONTROLSUZ KOPYA

3.1.7 Bicycle Barrier (Optional).....34
3.2.1 Packaging.....34
3.2.2 Transportation.....34
3.2.3 Storage.....34
3.3.1 Packaging.....35
3.3.2 Transportation.....35
3.3.3 Storage.....35
3.3.4. Commissioning.....35
4. USER'S MANUEL.....36
4.1 Safety.....35
4.1.1 Safety Warning.....35
4.1.2 SAFETY WARNING LABELS AND PLACES OF USAGE.....37
4.1.2.1 Definitions.....37
4.1.2.2 Places of Usage.....38
4.2 Safety Precautions.....42
4.3 Safe Maintenance.....44
4.3.1 Warnings :.....46
4.4 Instruction Manual :.....46
4.5 Terms Of Use:.....46
4.6 Use Of Garbage Equipment :.....46
4.6.1 Loading Garbage with Bin Lifter (optional).....48
4.6.2 Garbage Loading With Skip Loader Arms (optional).....51
4.6.3 Operation of the Plate-Shovel System.....50
4.6.4 Loading System.....51
4.6.5 Discharge System.....52
4.7 Command and Controls.....53
4.7.1 Right Control, 6-Way Control Unit.....53
4.7.2 Two-Hand 4-Way Control Box.....54
4.7.3 2-Way Control Box.....58
4.7.4 Single Yellow Emergency Stop Control Box.....57
4.7.5 Driver's Cab Control System.....58
5. TROUBLESHOOTING AND MAINTENANCE.....60
5.1 Hydraulic Oil Use and Lubrication Chart.....60

KONTROLSUZ KOPYA

5.2 Equipment Maintenance Chart....63
5.3 Malfunction– Cause – Solution Table....65
5.4 Circuit Diagrams....67
5.4.1 Hydraulic Circuit Diagram....71
5.4.2 Electric Circuit Diagram....69
6.SPARE PART LIST....70
6.1 Product Installation....71
6.1.1 Body Final Installation....71
6.1.2 Tailgate Final Installation....71
6.1.3 Body Installation....73
6.1.4 Ejecting Panel Installation....75
6.1.5 Oil Tank Installation....77
6.1.6 Tandem Oil Tank Installation....79
6.1.7 Tailgate Installation....84
6.1.8 Packer Blade Installation....84
6.1.9 Slide Installation....85
6.1.10 Tailgate Support Installation....86
6.1.11 Footboard Installation....87
6.1.12 Bin Lifter (A2 / Europe Type) Installation....88
6.1.13 Waste Water Tank Installation....90
6.1.14 Handle Bar Installation....91
6.1.15 Container Lid Opening Installation....92
6.1.16 Container Support Installation....94
6.1.17 Skiploader Arm Installation....94
6.1.18 Skiploader Stabilizer Installation....96
6.1.19 Washing System....96
6.1.20 Installation of Hydraulic and Pneumatic Connections....96
7. CRITICAL SPARE PARTS LIST....127
8. WARRANTY CONDITIONS of ORAKCI MACHINERY....138
8.1.1 General Storage Conditions....141
8.1.2 Storage Conditions of Electronic Components....141
8.1.3 Storage Conditions of Hydraulic Pistons and Hydraulic Seals....142
9. Additional Documents....**143**

KONTROLSUZ KOPYA

TABLE OF FIGURES

Image 1 : Rear Loader Refuse Body....11
Image 2: Hydraulic Compression Refuse Body Components....11
Image 3 : Mounting Types of The Body....12
Image 4: Body Components....14
Image 5: Tailgate Components....15
Image 6 : Tailgate Optional Features....17
Image 7: Shipment of Disassembled Product....18
Image 8 : Lifting Points....19
Image 9: Removing the Rear Bumper for Installation....20
Image 10: Vehicle Chassis....21
Image 11: Placing the Body on the Chassis....21
Image 12:Bracket Connections....22
Image 13: Bracket Connections....22
Image 14: Image of Bracket Connection....25
Image 15: Type Spring L Connection Fitting....25
Image 16 : 2.Type Spring L-link Fitting....26
Image 17: Type Spring L Connection Fitting....27
Image 18: I Connection Assembly....28
Image 19: Hydraulic connections....29
Image 20:Hydraulic Connections On Vehicle....30
Image 21: Sample Connection....31
Image 22. Pneumatic Connections....31
Image 23: Mud guards....32
Image 24: Mudguard installation....33
Image 25: Waste Water Tank....33
Image 26:Bicycle Barrier....34
Image 27: Display of Label Areas....38
Image 28: Display of the Uses of the Labels....40
Image 29 : Garbage Loading with Bin Lifter....49
Image 302: Garbage Loading with Skip loader Arms....50

KONTROLSUZ KOPYA

Image 31: Operation of Packer Blade and Carrier Plate System.....51
Image 32: Loading System.....52
Image 33: Demonstration of the Discharge System.....53
Image: 34: 6-way control box.....53
Image 357: 4-Way Control Box.....54
Image 36: 2-way Control Box on the left.....55
Image 37: 2-way Control Box on the left.....56
Image 38: Single Yellow Emergency Control Box.....57
Image 39: Representation Cab Control System.....58
Image 40.: Representation Cab Control System.....59
Image 41.: Representation Cab Control System.....59
Image 42: Lubrication Zones.....62
Image 43: Final Assembly Representation of the Tailgate.....71
Image 44:Assembly of Body.....73
Image 45:Ejecting Panel Assembly Demonstration.....75
Image 46: Assembly of Ejector Plate.....76
Image 47:Assembly of Oil Tank.....77
Image 48: Assembly of Tandem Oil Tank.....79
Image 49: Assembly of Tailgate.....80
Image 50: Assembly of Tailgate.....82
Image 51: Assembly of Packer Blade 84
Image 52: Assembly of Slide.....85
Image 53:Tailgate Support Assembly.....86
Image 54: Assembly of Step.....87
Image 55: Bin Lifter (A2 / Europe Type) Installation.....88
Image 56: Waste Water Tank Installation.....90
Image 57: Installation of Barrier.....91
Image 58: Installation of Container Opener Bar.....92
Image 59: Installation of Bin Stopper.....94
Image 60: Installation of Skiploader Booms.....95
Image 61: Installation Skiploader Stabilizer.....96
Image 62: Locations and Installation Hydraulic Piston.....98
Image 63: Hydraulic Piston and Repair Kits for Visual Purposes.....100

KONTROLSUZ KOPYA

Image 64:Hydraulic Connections of Tailgate Equipment.....102
Image 65: Tailgate Hydraulic Schema.....106
Image 66: Body Tandem Hydraulic Schema.....110
Image 67:Assembly of Bin-Lifter Hydraulic Connection.....114
Image 68:Assambly of Oil Tank Hydraulic Connection.....116
Image 69 :Skiploader Hydraulic Schema.....122
Image 70: Pneumatic Connection of Container Opener and Stopper Bar.....123
Image 71: Electrical Part Assemblies of the Equipment.....125

LIST OF TABLES

Table 1 : Bracket Connection Table.....24
Table 2: L Type Connection Bracket Fasteners Table.....25
Table 3: 2. Type Connection Bracket Elements Table.....26
Table 4: L type Connection Bracket Elements Table.....27
Table 5: I Connection Bracket Elements Table.....28
Table 6: Tabel of Labels.....41
Table 7: Hydraulic Oil Brands.....61
Table 8: Equipment Maintenance Chart.....64
Table 9 : Defect Cause-Solution Table.....67
Table 10: Illustration of Tailgate Final Installation.....71
Table 11: Illustration of Tailgate Final Installation.....72
Table 12: Tailgate Last Intallation Elements.....73
Table 13: Body Connection Elements.....74
Table 14: Ejecting Panel Connection Elemets.....75
Table 15: Ejecting Panel Connection Elements Table-2.....76
Table 16: Oil Tank Connection Elemets Table.....78
Table 17: Tandem Oil Tank Connection Elements Table.....79
Table 18: Tailgate Connection Elements Table.....81
Table 19: Tailgate Connection Elements Table -2.....83
Table 20: Packer Blade Connection Elements Table.....84

KONTROLSÜZ KOPYA

Table 21: Slide Connection Elements Table.....85
Table 22: Tailgate Suport Connection Elements Table.....86
Table 23: Footboard Connection Elements Tabl.....87
Table 24: Bin Lifter Connection Elements Table.....89
Table 25: Water Water Tank Connection Table.....90
Table 26:Handle Bar Connection Elements Table.....91
Table 27: Container Lid Opening Connection Elements Table.....92
Table 28: Container Lid Opening Connection Elements Table -2.....93
Table 29: Container Support Connection Elements Table.....94
Table 30: Skiploader Arms Connection Elements Table.....95
Table 31: Skiploader Stabilizer Connection Elements Table.....96
Table 32: Washing System Connection Elements Table.....98
Table 33: Hydraulic Pistons.....99
Table 34 : Repair Kit Set Table.....101
Table 35: Tailgate Hydraulic Chart.....105
Table 36: Body Hydraulic Chart.....109
Table 37: Body Tandem Hydraulic Chart.....113
Table 38: Bin-Lifter Chart.....116
Table 39: Oil Tank.....119
Table 40: Skiploader Hydraulic Schema.....123
Table 41 : Container cover and Docking parts of Assembling.....124
Table 42 Electrical Parts of Equipment.....126
Table 43: Critical Spare Parts List.....137
Table 44 : Warranty table.....141
Table 45: Service terms table.....141

KONTROLSUZ KOPYA

1. GENERAL INFORMATION

1.1 Preface

This catalog is designed for ORV Series Equipment in nine sections for easy access and ease of use. The catalog includes: Parts Lists, User Manual, Labels, Hydraulic and Electrical Schematics and Defect Detection and Maintenance sections.

The information contained in this booklet must be read carefully and thoroughly understood before using the equipment or performing maintenance on the equipment. Failure to follow written instructions may result in injury to persons or damage to equipment.

This Product Booklet shall always be kept with the equipment.

Orakçı Machinery reserves the right to make technical changes on the equipment and the booklet without prior notice.

1.2 DESCRIPTION OF PARTS LISTS

The following is an example list showing the parts. The use of the given list will be explained.

The lists include reference, part code, description and quantity information.

The reference specifies the index to which the numbered part belongs to the product image.

The part number indicates the part code for the given index

The description identifies the part of the given code.

The piece information indicates how many pieces are used in the image shown.

The optional information is used to report optional features on the equipment. Abbreviations used are as follows:

O: Indıcates that the equipment has optional features. Optional features varies according to customer specific requirements. May not be included in the equipment.

S: It included in the equipments as standard.

D: Has variable code. The code of the part changes according to the specifications of the equipment requested by the customer.

In the light of this information, it is possible to place orders for the relevant part from the lists in the instruction manual or to access the description easily.

KONTROLSUZ KOPYA

Ref	Part Code	Description	Optional	Piece
1				

1.3 SPARE PARTS SUPPLY METHOD

The equipment serial number (TYPE) and the chassis number (VIN) are located on the History Label of the equipment.

When ordering spare parts, the request form must include the equipment chassis number, part description, part code and requested quantity. This will ensure that you receive the right product in a short time.

Please contact with Orakçı Machinery for spare parts and service.

SALES DEPARTMENT
Ovaakça Santral Mah.
Kahraman Sokak No:52, ZC: 16335
Osmangazi Bursa / TÜRKIYE
T : +90 (224) 493 24 98 / 1200,1201
F : +90 (224) 493 24 99
E : export@orakcimakina.com

FACTORY
Ovaakça Santral Mah.
Kahraman Sokak No:52, ZC: 16335
Osmangazi Bursa / TÜRKIYE
T : +90 (224) 493 24 98
F : +90 (224) 493 24 99
E : info@orakcimakina.com

KONTROLSUZ KOPYA

2.TERMINOLOGY

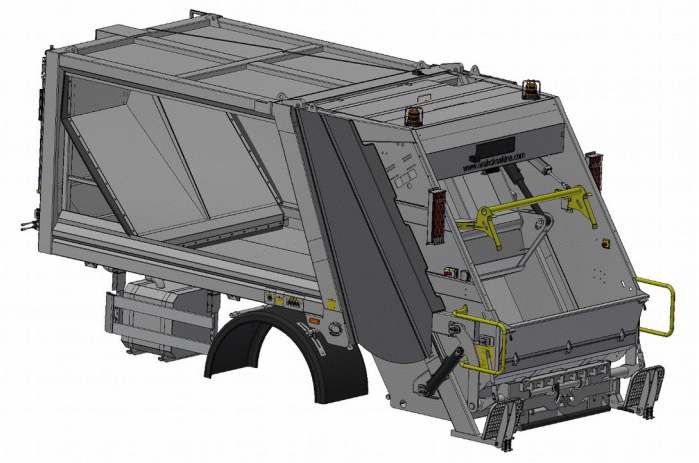

Image 1 : *Rear Loader Refuse Body*

Hydraulic Compression Refuse Body (HCRB) consists of a Body placed on chassis, a tailgate with a slide packer blade mechanism, an Ejector Plate inside the body, a Bin Lifter and hydraulic and electrical installation.

The functions and load distribution of the HCRB are regulated in accordance with the technical specifications of the truck on which it is placed.

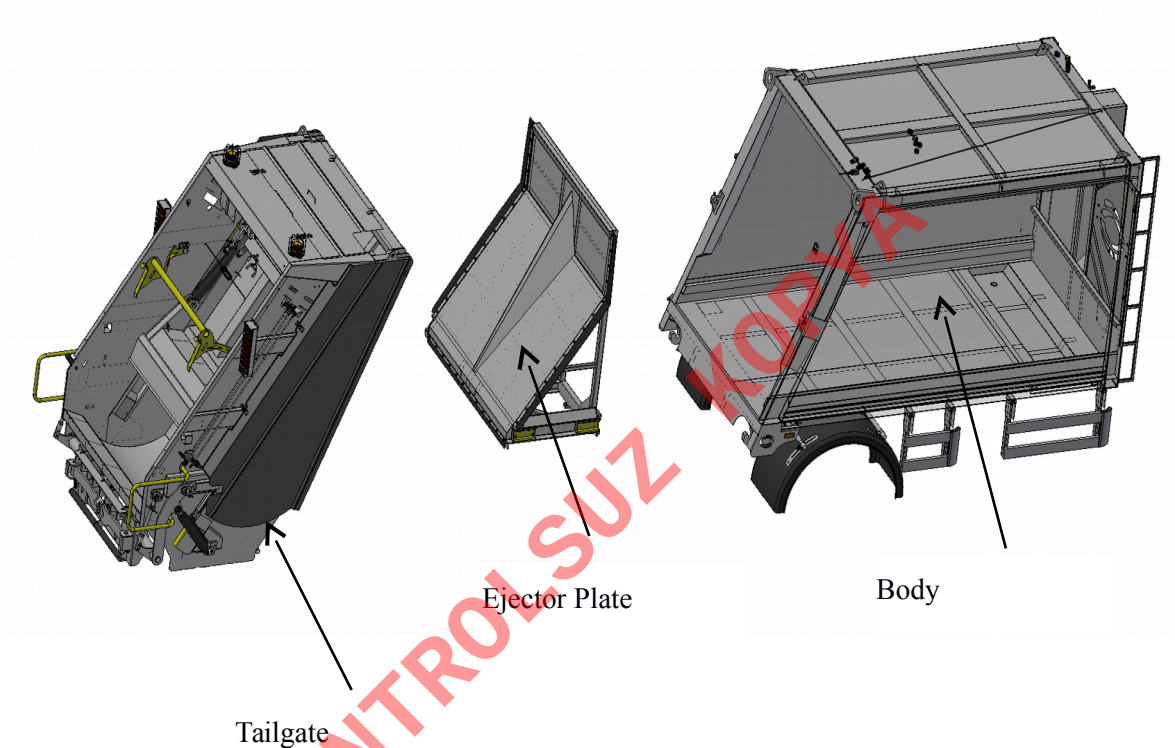

KONTROLSUZ KOPYA

Image 2 Hydraulic Compacted Garbage Body Components

2.1 Body

This is the part of the equipment where compacted garbage is stored. The body is supported by U-shaped vertical steel profiles and is connected to the vehicle chassis with flexible connections.

It has a high strength structure. It is produced from S355J2 + N sheet which has high abrasion resistance. According to customer request, the places exposed to high abrasion resistance such as floor panel, etc. may be produced from high strength (Hardox 400-450) sheet. (Optional)

There is a telescopic rod in the general assembly of the body. The telescopic rod is the support structure to which the telescopic cylinder is connected, which enables the movement of the ejector plate within the body. In the ratio range given in the technical document, it has a pressure-resistant structure formed by compressed waste.

KONTROLSUZ KOPYA

Image 3 : Mounting Types of The Body

Body assembly structure is divided into 2 types as oval and rectangular. Oval Ceiling is available in ORV 200, ORV 300 and ORV 400 series. The rectangular body is only available in the ORV 400 series.

2.2 EJECTOR PLATE

The ejector plate moves on the rails by means of a telescopic cylinder in the body. It has two basic functions. These are as follows:

- Ensures that the waste is taken into the body by baling the waste by moving forward automatically at the set pressure value during waste collection,
- Ensures the discharge of waste in the body.

2.3 Tailgate

The tailgate is connected to the top of the body by a slot hinge and is opened upwards with the help of two cylinders. When switched off, it locks automatically. There is a special form of sealing element that prevents water leakage from the body.

The waste collected in the high carbon steel hopper consists of the linear movements of the compacting mechanism between the slide on the tailgate side wall of the slide and the slide hinged radial movements of the blade.

Under the tailgate, there is an articulated safety support to secure the maintenance/repair between the body and the tailgate. In addition, there are lock valves on the tailgate opening hydraulic cylinders to prevent the tailgate descending in the event of the failure, including hose burst.

There are two non-slip type folding personnel steps attached to the back of the tailgate (Optional)

KONTROLSUZ KOPYA

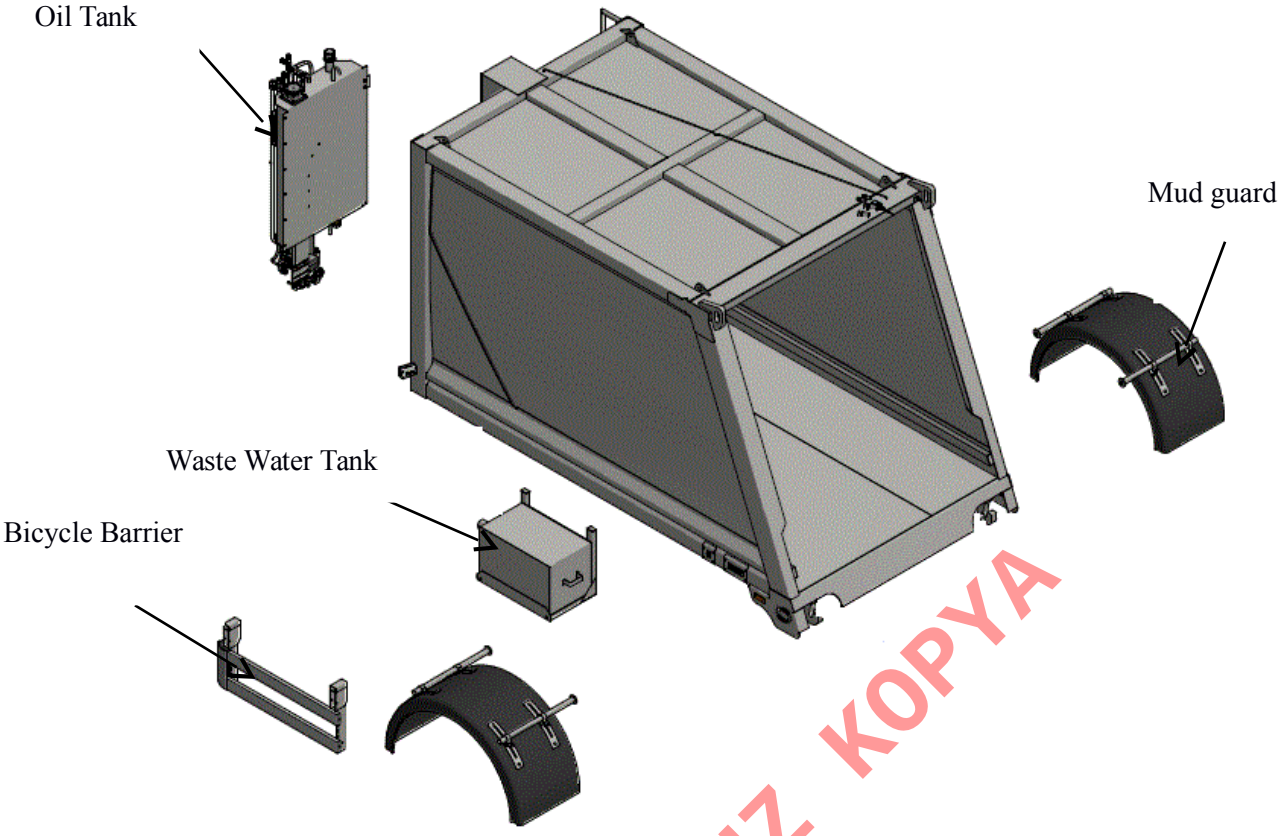

Image 4: Body Components

KONTROLSUZ KOPYA

2.4 Oil Tank

Oil Tank ensures cooling, settling, suction of hydraulic oil circulating in the system and the cleaning with suction and return filters.

2.5 Waste Water Tank (Optional)

The wastewater tank is designed for storing wastewater accumulated by compressing the garbage in the equipment. The wastewater tank is designed for optimum volume and different series and can be installed in the vehicle in a suitable place and is sealed.

2.6 Bicycle Barrier (Optional)

Bicycle Barrier is designed to prevent entry under the vehicle in case of an accident. They are installed in the empty spaces of the vehicle in accordance with certain standards.

2.7 Mud Guard (Optional)

The mudguard is the part used to prevent sludge or dirt from the wheels during operation of the vehicle.

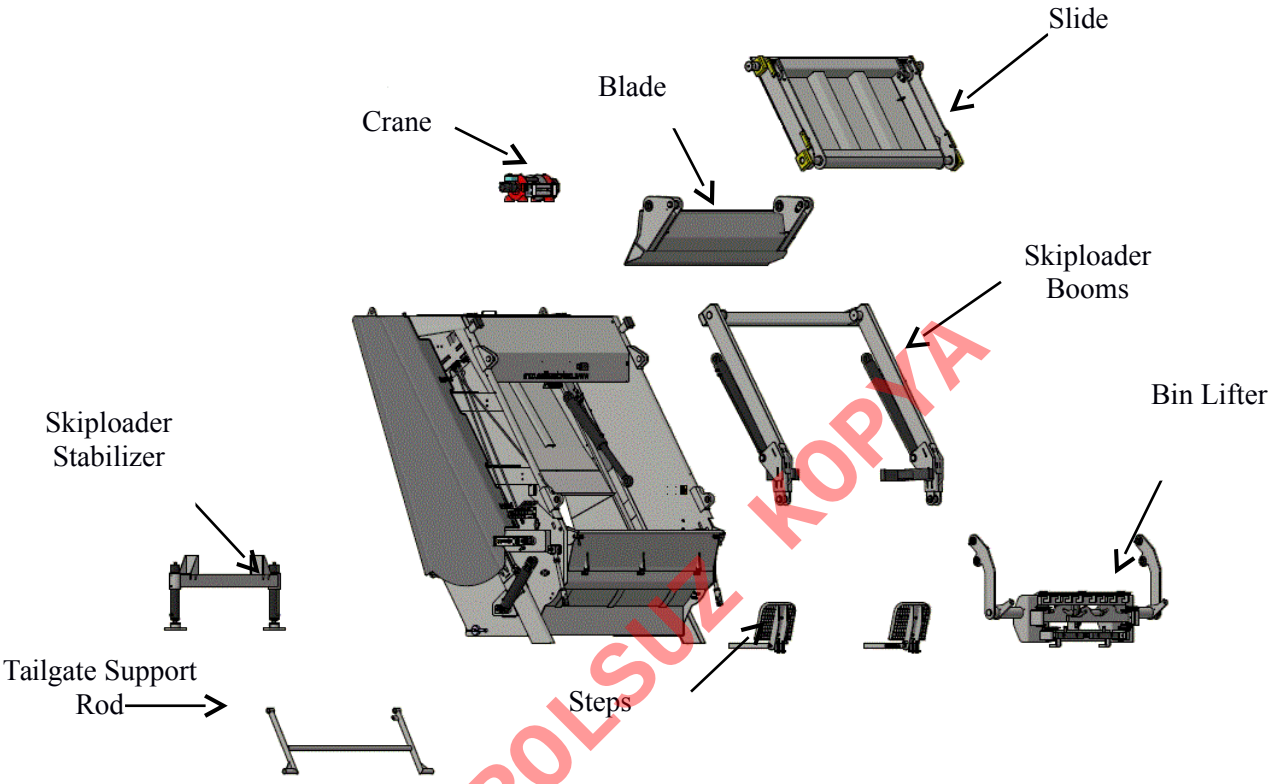

Image 5: Tailgate Components

KONTROLSUZ KOPYA

2.8 Slide and Packer System

The blade moves on the guide on both sides, depending on the slide system. It performs the compression of the garbage collected during loading to the back of the discharge chamber and into the body.

It is made from high-strength sheet metal. For areas subject to high wear, high wear resistance sheet can be used according to customer requirements. (Optional).The material of the connection parts is selected from special steel with high strength. The slides (Castermid) are located on two the sides of the rear section and guide the slide cylinder.

2.9 Bin Lifter (Optional)

The bin lifter is designed to fit the standard and country-specific waste equipment. The hydraulic cylinders on both sides provide lifting and rotating movement and garbage loading.

2.10 SKIPLOADER GROUP (OPTIONAL)

2.10.1 Skiploader Booms

It is a system consisting of two hydraulic arms and chains that are moved by two hydraulic cylinders to load garbage in large volume ($4m^3$-$6m^3$) containers.

2.10.2 Skiploader Stabilizer

They are used in equipment where the center of gravity may pose a risk when lifting large volume waste containers.

2.11 Crane (Optional)

It is a system used for large volume garbage containers that are suitable to be picked up by a crane, which may vary by country.

2.12 Tailgate Support (Optional)

It is designed to create a safe working area during service and maintenance by resting the tailgate on the forks under the body.

2.13 Steps (Optional)

Footboard located on the back of the Rear Loaded Refuse Compactor, is a fixed or movable design where the operators will stand while the vehicle is moving

KONTROLSÜZ KOPYA

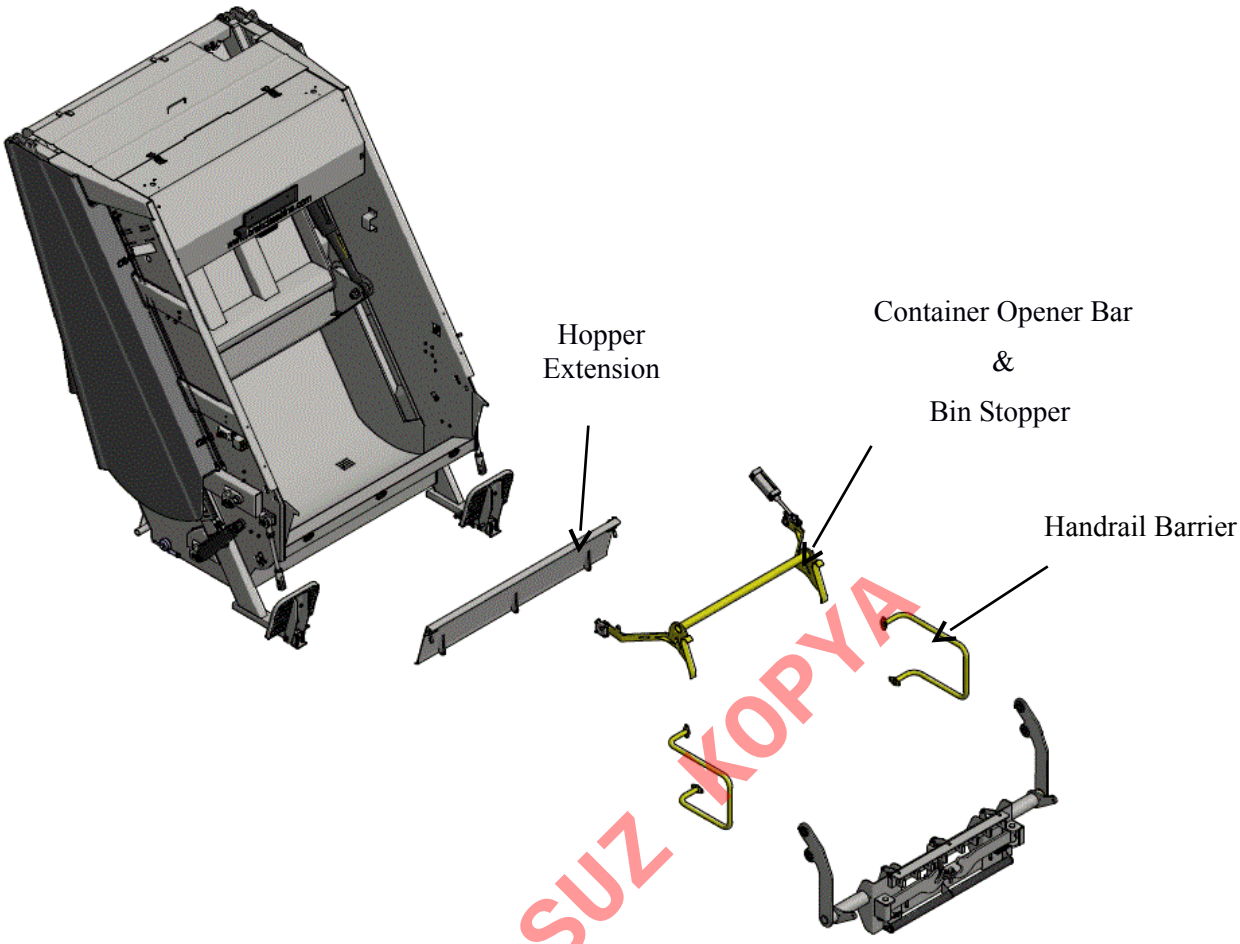

Image 6 : Tailgate Optional Features

KONTROLSUZ KOPYA

2.14 Hopper Extension (Optional)

It is the part designed so that the user cannot touch the compaction plate on the tailgate by hand while the vehicle is empty or ready to be loaded.

2.15 Container Opener Bar & Bin Stopper (Optional)

It is a design made to prevent the closure of the lid during the emptying of large volume waste containers taken with the bin lifter. Another task is to prevent the container from falling into the hopper.

The container support is used to prevent the waste container from falling into the waste collection hopper.

2.16 Rail Barrier (Optional)

It is a part designed to prevent the operator working on the footboard to fall during the maneuver of the driver.

3.CONDITIONS OF ASSEMBLY

Hands-on training by Orakçı Machinery team must be provided to the customer during first delivery (assembly, disassembly). This is important for the continuity of the warranty terms and customer satisfaction. All faults which may arise due non Installation by Orakçı Machinery or faults caused by the customer shall be considered outside the scope of the warranty.

3.1 On Vehicle Installation Conditions

The delivery of the equipment to the customer is carried out either on-vehicle or in the container.

If the equipment is on the vehicle, all operations are performed by Orakçı Machinery.

The equipment in the container is ready to be mounted on the vehicle or in order to save space, the tailgate and the body section have been dismantled.

The general installation of the vehicle is done as follows.

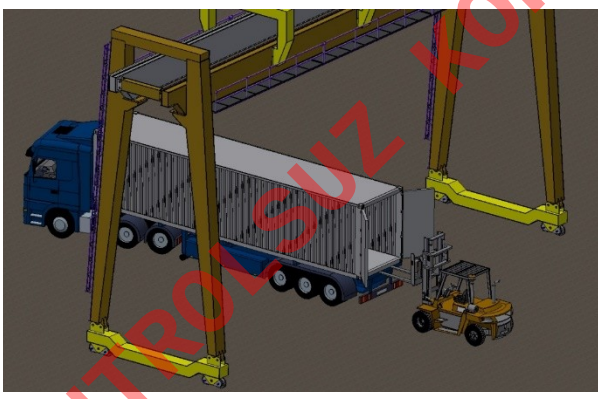

Image 7: Shipment of Disassembled Product

The lorry must be parked in a suitable position for container unloading.

KONTROLSUZ KOPYA

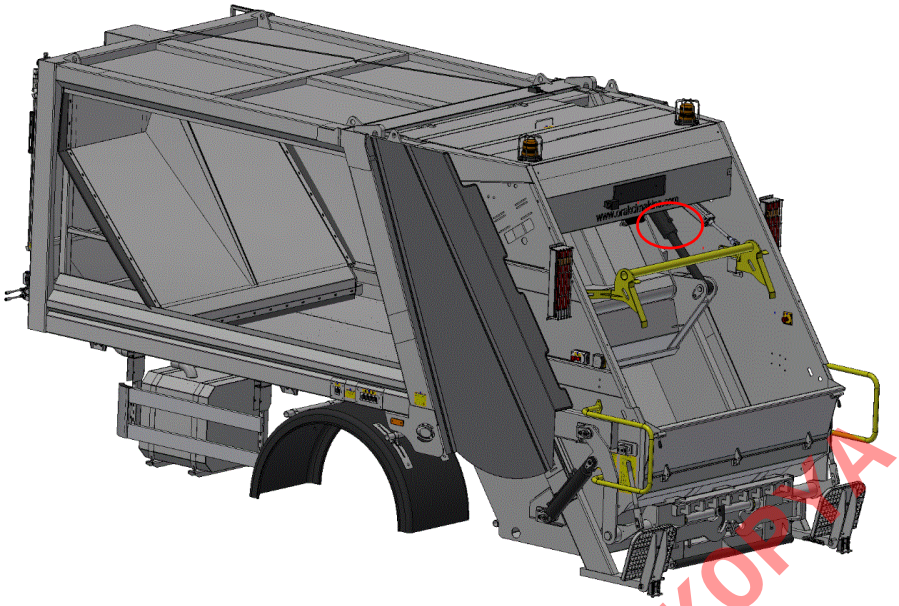

Image 8 : Lifting Points

At first, in order to carry the equipment, it must be balanced in such a way that the center of gravity is between the ropes. It should be connected to the lifting points on the equipment as shown in the picture above. In order to safely lift the equipment, it should be lifted at the appropriate points. If the body is to be lifted, 4 lifting eyebolts on the body should be removed and if the tailgate is to be lifted, the eyebolt in the hinge section and the tailgate must be removed from the hole on the side wall plate. If the equipment is fully assembled, it must be lifted from the hinge and body connection points.

KONTROLSUZ KOPYA

View of the Loading to Vehicle

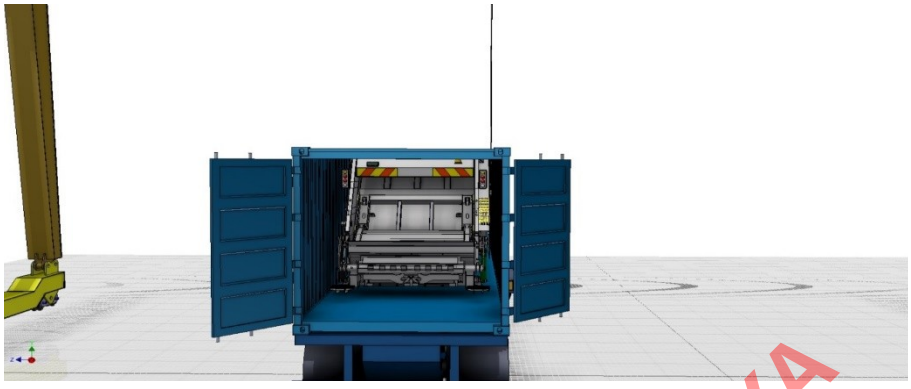

Image 9:

In order to load the equipment to the vehicle, it is necessary to remove the equipment from the container with the help of crane and forklift.

KONTROLSÜZ KOPYA

Image 9: Removing the Rear Bumper for Installation

As shown in the figure, the rear bumper is removed for on-vehicle installation.

Image 10: Vehicle Chassis

If necessary, the equipment chassis is cut and shortened in accordance with the superstructure instructions of the related brand.

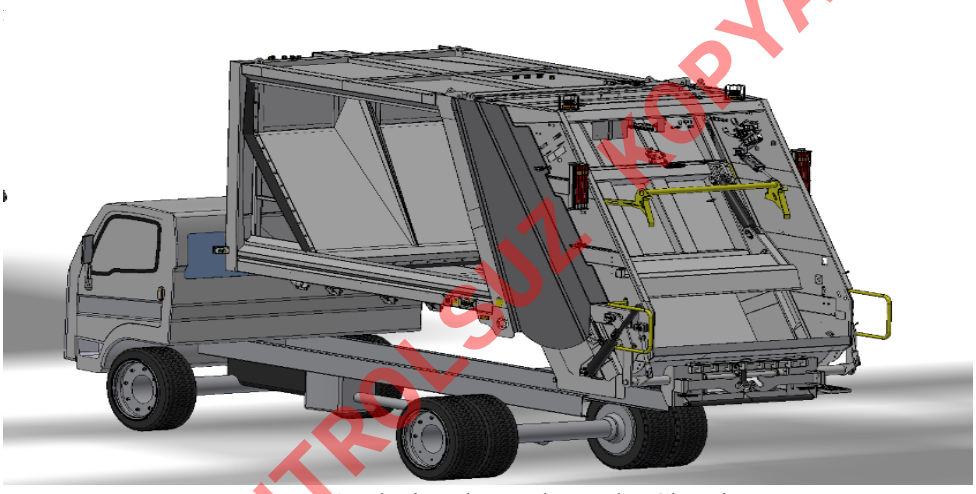

Image 11: Placing the Body on the Chassis

KONTROLSÜZ KOPYA

While placing the equipment on the vehicle, a crane suitable for the weight of the equipment must be used by lifting from the lifting points.

The equipment is placed on the truck chassis in a complete manner.

3.1.1 Bracket Connection Installation

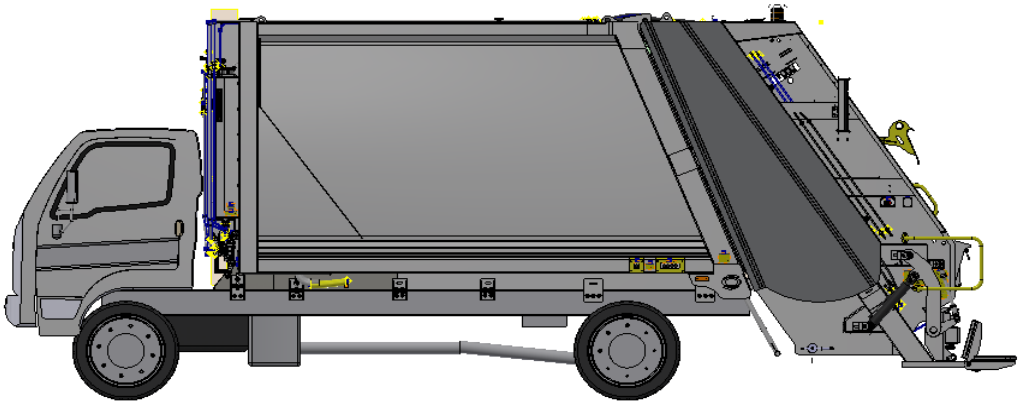

Image 12:Bracket Connections

Bracket connections must be made in accordance with standards in order to connect the equipment on the chassis with the vehicle.

As superstructure standards vary according to vehicle models, Orakçı Machinery has formed its own standards based on an analysis. Orakçı Superstructure Bracket Table is as follows.

KONTROLSUZ KOPYA

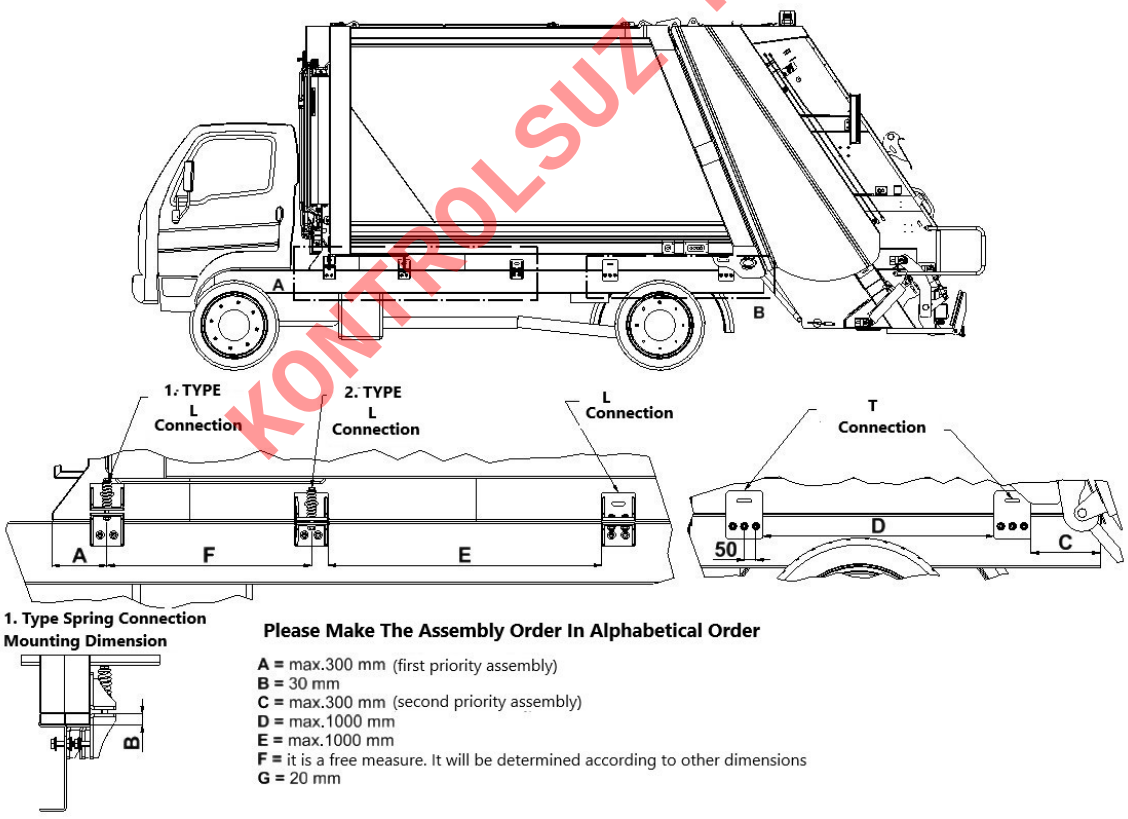

Image 13: Bracket Connections

The ORV series compacted refuse equipment has 4 types of bracket connections.

1) 1. Type Spring L Connection

2) 2. Type Spring L Connection

3) L Connection

4) I Connection

Type 1, spring L connection must be connected to the front of the equipment and welded to a maximum area of 300 mm from the chassis end. Spring L-connection must be connected 30 mm above the frame joint to support the centering of the vehicle. It should be connected as the first priority.

I Connection (Flat Connection) must be welded to the rear of the equipment to center the vehicle. Chassis connection should be a second priority by making a maximum 300 mm from the end.

Type 2 spring L Connection must be connected behind type 1 connection. It should have a maximum of 1000 mm in between

Finally, Type 2 Spring L Connection mounting is mounted as a free size after Type 1 Spring L Connection bracket.

Below is the " Superstructure Connection Table " of Orakçı Machinery

KONTROLSUZ KOPYA

ÜST YAPI BAĞLANTI BRAKETLERİ TABLOSU

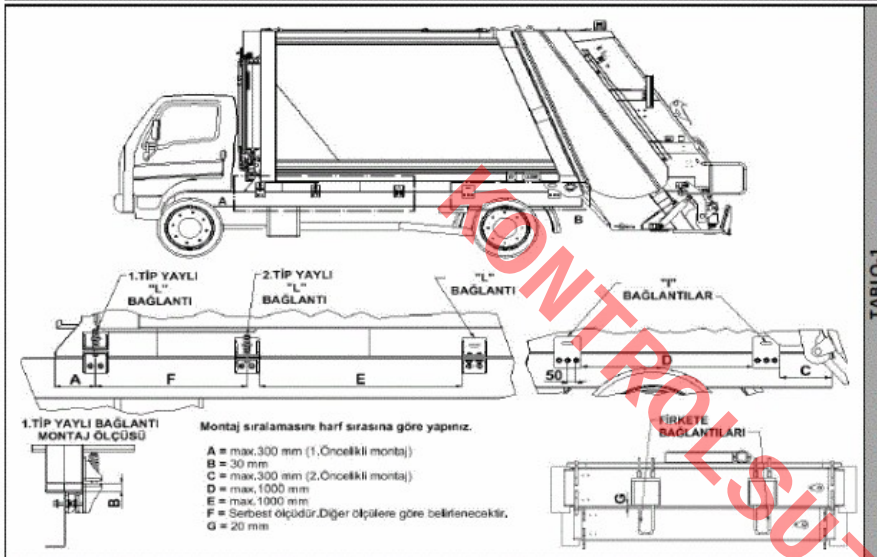

TABLO-1

1.TİP YAYLI "L" BAĞLANTI PARÇA LİSTESİ TMOALLBRGSAA001	2.TİP YAYLI "L" BAĞLANTI PARÇA LİSTESİ TMOALLBRGSAA004	"L" BAĞLANTI PARÇA LİSTESİ TMOALLBRGSAA002	"T" BAĞLANTI PARÇA LİSTESİ TMOALLBRGSAA003	FİRKETE BAĞLANTI PARÇA LİSTESİ		
				1.TİP FİRKETE BAĞLANTI TMOALLBRMSAA006	2.TİP FİRKETE BAĞLANTI TMOALLBRMSAA007	3.TİP FİRKETE BAĞLANTI TMOALLBRMSAA008
100100320005 : 1 adet M16x140 mm Civatalar / 10.9 Kalite / Galvaniz Kaplı / Altıköşe Flanşlı Yarım Passo	100100320005 : 1 adet M16x140 mm Civatalar / 10.9 Kalite / Galvaniz Kaplı / Altıköşe Flanşlı Yarım Passo	100100310001 : 4 adet M14x50x1.5 mm Civatalar / 10.9 Kalite / Galvaniz Kaplı / Altıköşe Flanşlı Tam Passo	100100310001 : 3 adet M14x50x1.5 mm Civatalar / 10.9 Kalite / Galvaniz Kaplı / Altıköşe Flanşlı Tam Passo			
100200440002 : 1 adet M16 Somunlar / 10 Kalite / Galvaniz Kaplı / Flanşlı	100200440002 : 1 adet M16 Somunlar / 10 Kalite / Galvaniz Kaplı / Flanşlı	100200440001 : 4 adet M14 Somunlar / 10 Kalite / Galvaniz Kaplı / Flanşlı	100200440001 : 3 adet M14 Somunlar / 10 Kalite / Galvaniz Kaplı / Flanşlı	100201980001 : 2 adet Somunlar / Teknyeli Somun / M22 Yüksekllk 33	100201980001 : 2 adet Somunlar / Teknyeli Somun / M22 Yüksekllk 33	100201980001 : 2 adet Somunlar / Teknyeli Somun / M22 Yüksekllk 33
101800890002 : 1 adet Ø8 mm x İç Çap: 19 mm x Dış Çap: 35 mm x Yay Serbest Boyu: 95 mm - Hatve: 11.87 - Sarım Yönü: Sağ / Yaylar / Basma Yayı	101800890002 : 1 adet Ø8 mm x İç Çap: 19 mm x Dış Çap: 35 mm x Yay Serbest Boyu: 95 mm - Hatve: 11.87 - Sarım Yönü: Sağ / Yaylar / Basma Yayı	TMOALLBRPSAA009 : 1 adet	TMOALLBRPSAA001 : 1 adet	TMOALLBRTSAA001 : 1 adet TMOALLBRPSAA013 : 1 adet	TMOALLBRTSAA002 : 1 adet TMOALLBRPSAA013 : 1 adet	TMOALLBRTSAA003 : 1 adet TMOALLBRPSAA013 : 1 adet
100100310001 : 2 adet M14x50x1.5 mm Civatalar / 10.9 Kalite / Galvaniz Kaplı / Altıköşe Flanşlı Tam Passo	100100310001 : 2 adet M14x50x1.5 mm Civatalar / 10.9 Kalite / Galvaniz Kaplı / Altıköşe Flanşlı Tam Passo	*TMOALLBRMSAA001 : 1 adet **TMOALLBRPSAA005 : 1 adet **TMOALLBRPSAA004 : 2 adet				
100200440001 : 2 adet M14 Somunlar / 10 Kalite / Galvaniz Kaplı / Flanşlı	100200440001 : 2 adet M14 Somunlar / 10 Kalite / Galvaniz Kaplı / Flanşlı	*TMOALLBRMSAA002 : 1 adet **TMOALLBRPSAA002 : 1 adet **TMOALLBRPSAA004 : 2 adet				
*TMOALLBRMSAA003 : 1 adet **TMOALLBRPSAA006 : 1 adet **TMOALLBRPSAA004 : 2 adet	*TMOALLBRMSAA003 : 1 adet **TMOALLBRPSAA006 : 1 adet **TMOALLBRPSAA004 : 2 adet					
*TMOALLBRMSAA004 : 1 adet **TMOALLBRPSAA008 : 1 adet **TMOALLBRPSAA005 : 2 adet	*TMOALLBRMSAA005 : 1 adet **TMOALLBRPSAA007 : 1 adet **TMOALLBRPSAA004 : 2 adet					

TABLO-2

METRAJ	2400 mm ≤ x < 3500 mm	3500 mm ≤ x < 4700 mm	4700 mm ≤ x < 5000 mm	5000 mm ≤ x < 5700 mm	5700 mm ≤ x < 6350 mm	6350 mm ≤ x
1.TİP YAYLI "L" BAĞLANTI	2 Adet	2 Adet	2 Adet	2 Adet	2 Adet	2 Adet
2.TİP YAYLI "L" BAĞLANTI	2 Adet	2 Adet	2 Adet	2 Adet	2 Adet	2 Adet
"L" BAĞLANTI	2 Adet	4 Adet	6 Adet	6 Adet	8 Adet	8 Adet (*2 m³ te, 1 Adet eklenecektir.)
"T" BAĞLANTI	4 Adet	4 Adet	4 Adet	4 Adet	4 Adet	4 Adet

TABLO-3

EKİPMAN	OTP 122 - 142 - 162 - 183	OTP 203 - 224 - 255	OKG
1.TİP FİRKETE BAĞLANTI	2 Adet	-	-
2.TİP FİRKETE BAĞLANTI	-	2 Adet	-
3.TİP FİRKETE BAĞLANTI	-	-	4 Adet

Tarih	27.12.2018	Hazırlayan	Onaylayan
Adı Soyadı		Arzu KALKANCILAR	Olcay ADAK
Rv.02			

TABLO-1: Bağlantı tiplerinin parça listesi bir adet braket montajına göre verilmiştir.
TABLO-2: Belirlenen braket bağlantı adetleri, bir ekipmanda kullanılacak toplam adetlerdir.
TABLO-3: Belirtilen ekipmanlar için, ek olarak kullanılacak firkete bağlantı adetleridir.

KONTROLSÜZ KOPYA

Table 1 : Bracket Connection Table

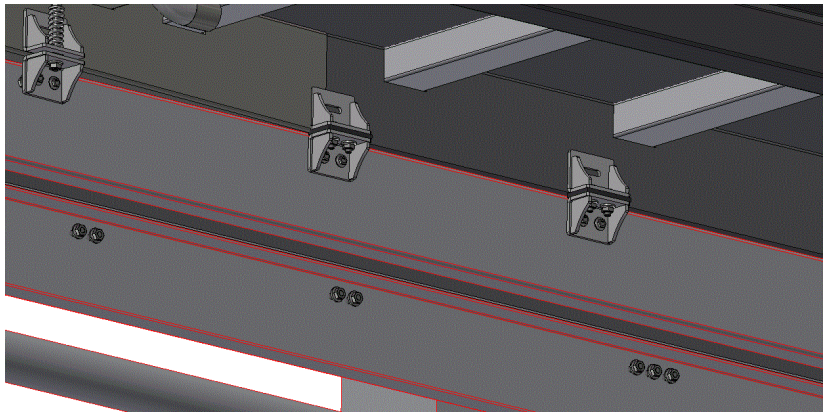

Image 14: Image of Bracket Connection

Brackets connection bolts are 10.9 quality M14x50x1,5. Connection nuts are 10 grades, which are qualified as M14x1,5 flanged chassis connection nuts.

Connection mounting lists of brackets are given below.

1. **Type Spring L Connection Fitting**

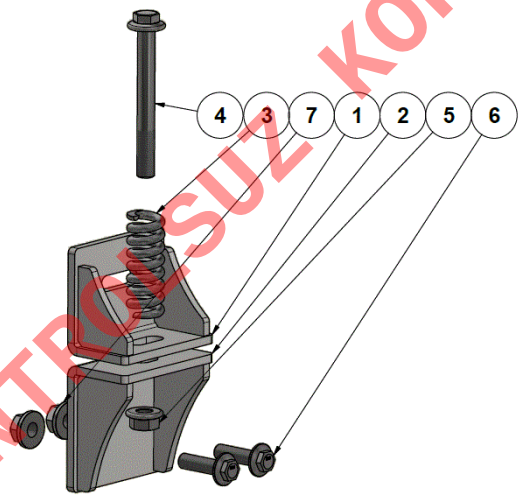

KONTROLSÜZ KOPYA

Image 15: Type Spring L Connection Fitting

Ref	Feature Code	Explanation	Optional	Piece
1	TMOALLBRMSAA003	L connection top assembly	Standard	1
2	TMOALLBRMSAA004	L connection subassembly	Standard	1
3	101800890002	Ø8 mm x Inside Diameter: 19 mm x External Diameter: 35 mm x Free Spring Length 95 mm – line and 11.87 –Roll Direction: right/,Springs / Press Spring	Standard	1
4	100100320005	M16x140 mm Bolts / 10.9 Quality / Galvanized / Hexagon Flanged Half Pass	Standard	1

Table 2: L Type Connection Bracket Fasteners Table

2. Type Spring L Connection Fitting

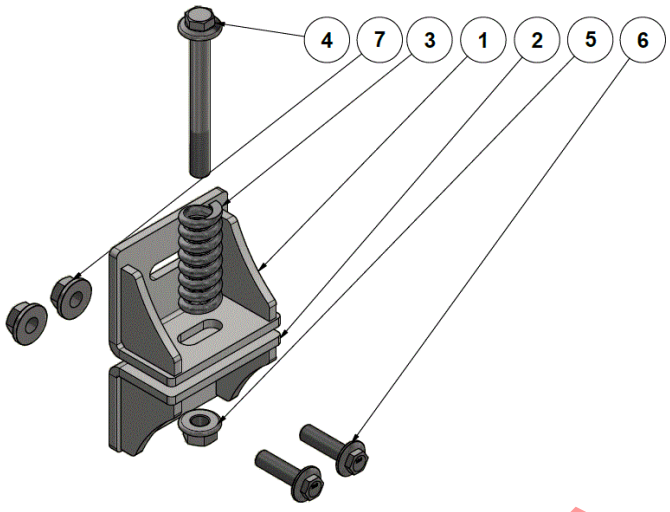

Image 16 : 2.Type Spring L-link Fitting

KONTROLSUZ KOPYA

Ref	Feature Code	Explanation	Optional	Piece
1	TMOALLBRMSAA003	L connection Top Assembly	Standard	1
2	TMOALLBRMSAA005	L connection subassembly	Standard	1
3	101800890002	Ø8 mm x inner diameter: 19 mm x external diameter: 35 mm x free spring length 95 mm – Pitch 11.87 – Roll Direction: right /Springs / Press Spring	Standard	1
4	100100320005	M16x140 mm Bolts / 10.9 Quality / Galvanized / Hexagon Flanged Half Pass	Standard	1
5	100200440002	M16 Bolts / 10 Quality / Galvanized / Flanged	Standard	1
6	100100310001	M14x50x1.5 mm Bolts / 10.9 Quality/ Galvanized / Hexagon Flanged Full Paso	Standard	2
7	100200440001	M14 Bolts / 10 Quality / Galvanized / Flanged	Standard	2

Table 3: 2. Type Connection Bracket Elements Table

L Connection Assembly

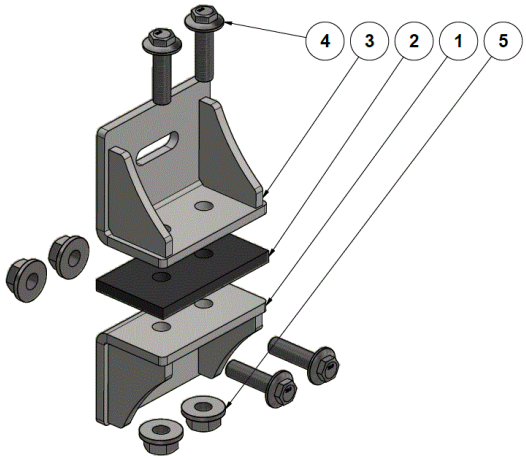

Image 17: Type Spring L Connection Fitting

Ref	Feature Code	Explanation	Optional	Piece
1	TMOALLBRMSAA001	L connection subassembly	Standard	1
2	TMOALLBRPSAA009	Bracket Rubber Wedge	Standard	1
3	TMOALLBRMSAA002	L connection top assembly	Standard	1
4	100100310001	M14x50x1.5 mm Bolts/ 10.9 Quality / Galvanized / Hexagon Flange Full Paso	Standard	4
5	100200440001	M14 Bolts / 10 Quality / Galvanized / Flanged	Standard	4

Table 4: L type Connection Bracket Elements Table

KONTROLSUZ KOPYA

I Connection Assembly

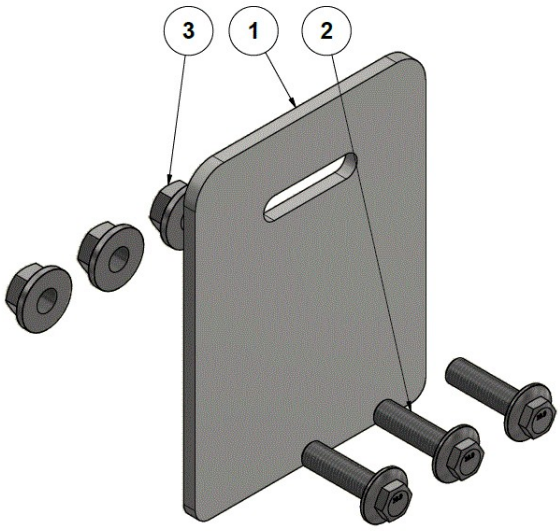

Image 18: I Connection Assembly

Ref	Feature Code	Explanation	Optional	Piece
1	TMOALLBRPSAA001	L connection subassembly	Standard	1
4	100100310001	M14x50x1.5 mm Bolts/ 10.9 Quality / Galvanized / Hexagon Flanged Full Paso	Standard	3
5	100200440001	M14 Loaves/ 10 Quality / Galvanized / Flanged	Standard	3

Table 5: I Connection Bracket Elements Table

KONTROLSUZ KOPYA

3.1.2 ON-VEHICLE HYDRAULIC CONNECTIONS

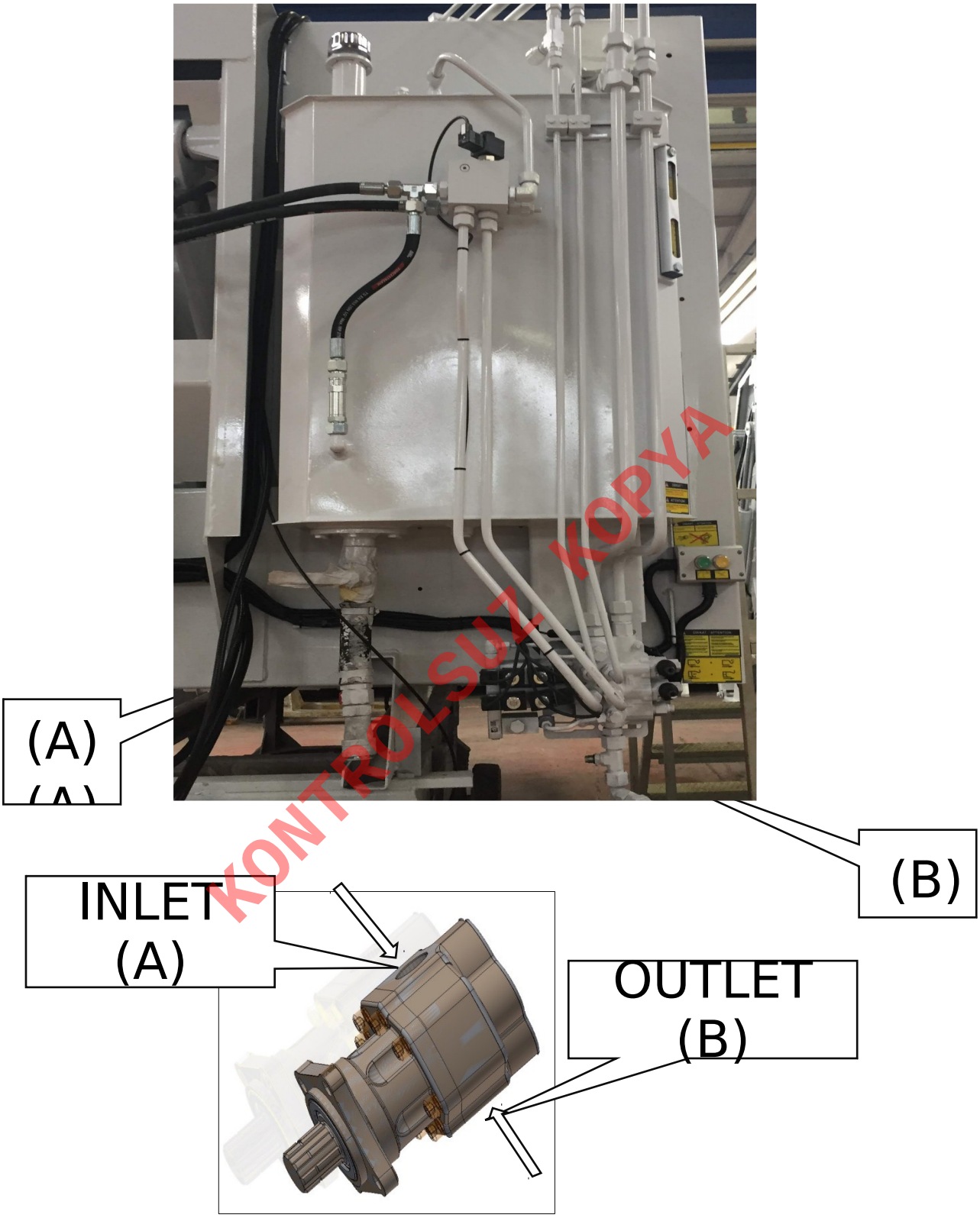

KONTROLSUZ KOPYA

Image 19: Hydraulic connections

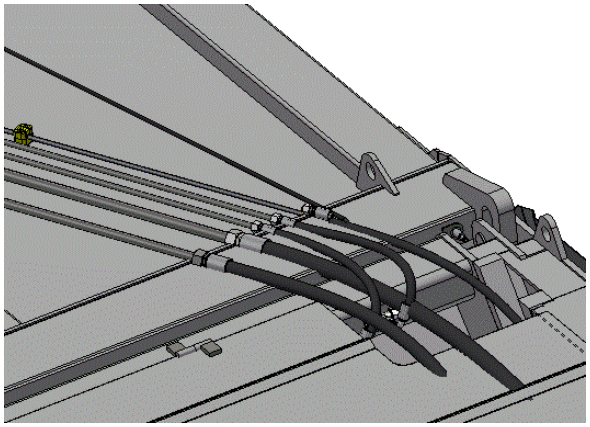

Image 20:Hydraulic Connections On Vehicle

As shown in the figure above, the part of the oil tank (A) and the INLET (A) part of the hydraulic pump on the truck are connected with an additional hose. The part of the hydraulic pump indicated with OUTLET (B) is connected to the part as indicated (B) on the equipment.

If the equipment is to be installed on the vehicle separately from the tailgate and the body, the hydraulic installations should be connected to each other as shown in the picture following the installation. The installation sequence may vary; thus, connections must be made according to the hydraulic installation diagram given in the manual.

As shown in the picture below, the hydraulic hoses and pipes to be assembled must be connected with Velcro tags with the same codes to connect the equipment hydraulic installations correctly.

Descriptions of the colors used in the labels below are given;

: Pump Line

: Tank Line

: Tailgate Opened Line

: Tailgate Closed Line

: Tandem Pressure Line

: Tandem Return Line

KONTROLSUZ KOPYA

3.1.2.1 The joints are marked on the hydraulic components as shown below.

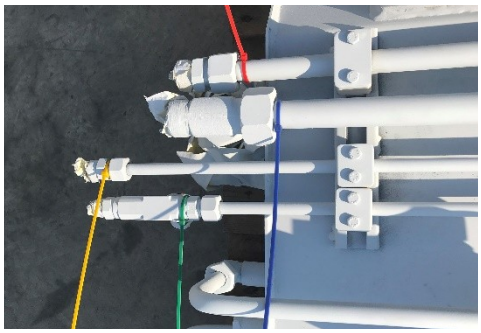

Image 21: Sample Connection

KONTROLSUZ KOPYA

The hydraulic line with the speed adjustment valve on the Oil Tank should be connected to the line that performs the tailgate opening process.

3.1.3 Pneumatic Connections

Container Opener Bar and Container Support systems on the tailgate are opened / closed optionally with Pneumatic Piston. Air must be taken from the vehicle for the pneumatic system to operate. The pneumatic valve shown below should be mounted by pulling the installation from the air tanks on the vehicle. Pneumatic hoses should be 4x6

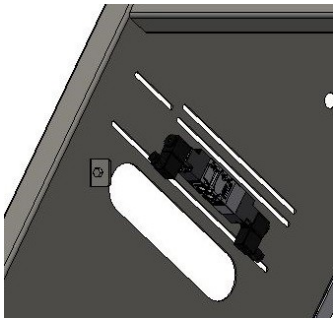

Image 22. Pneumatic Connections

3.1.4 Electrical Connections

- In order to activate the electrical system in ORV Equipment, the power supply on the vehicle (12V DC / 24V DC) and (-) must be connected to the appropriate points on the panel.
- In order to use the truck's power supply (+ 12V / + 24V), please contact an authorized service.
- The internal cab connections must be connected, and then the sockets of the swivel warning lamps must be inserted.

In order to make the electrical connection between the tailgate and the body, the respective sockets must be connected with each other.

3.1.5 On-Vehicle Mudguard Installation (Optional)

Image 23: Mud guards

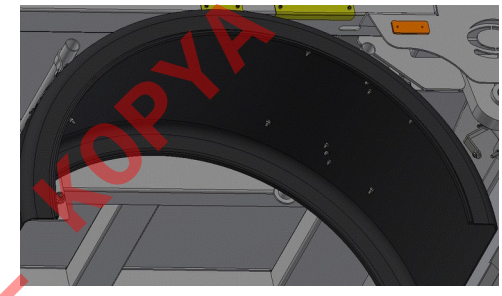

- The installed mudguard fasteners are shown below. Mudguard fixing group is mounted on the mudguard. Bolts and nuts, the components of fasteners, are fixed by drilling holes on the mudguard.

KONTROLSÜZ KOPYA

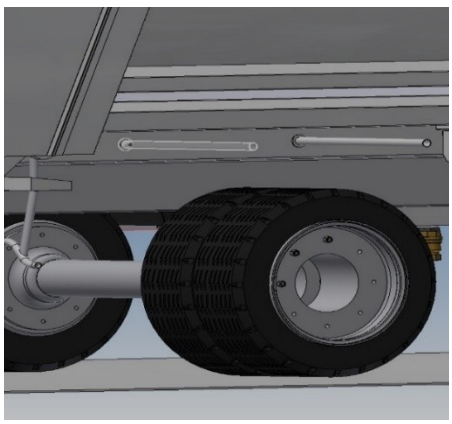

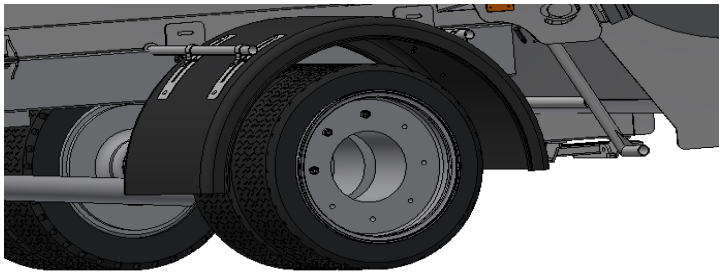

Image 24: *Mudguard installation*

Pipes are welded to the appropriate points for mudguard installation.

- The fasteners must be installed as shown in the figure.

3.1.6 On-vehicle Wastewater Tank Installation (Optional)

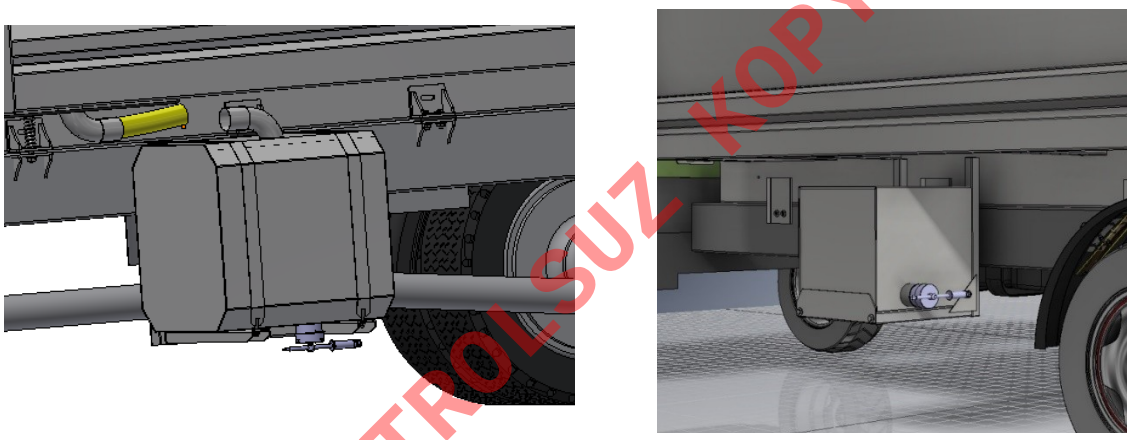

Image 25: *Waste Water Tank*

KONTROLSUZ KOPYA

The wastewater tank is mounted to the vehicle frame using M14x1,5x50 flange bolts and M14 flange nuts. If it is a model which it is welded onto the vehicle chassis, the equipment is welded to the chassis.

The connection between the wastewater outlet and the inlet part of the wastewater tank is made.

3.1.7 Bicycle Barrier (Optional)

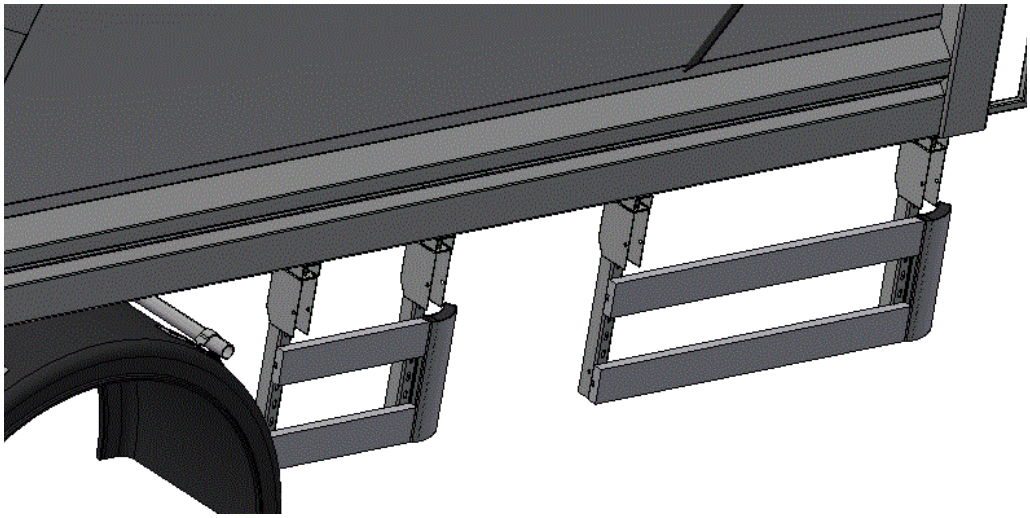

Image 26:Bicycle Barrier

After the combination of the vehicle with the equipment, it is necessary to place bicycle barrier on the remain empty places according to the standards.

The installation is required to be carried out by the customer as it will vary according to vehicle models.

3.2 Installation of Vehicle Chassis at Orakçı Machinery

3.2.1 Packaging

As the bodies are mounted on the chassis by Orakçı Machinery they are ready for use. No packaging is made.

3.2.2 Transportation

There is no need for shipment as the bodies are mounted on the chassis. It can be taken to the desired location with the vehicle it is mounted on.

When the chassis is mounted on the chassis, the vehicle must be used with caution as it will increase the center of gravity of the vehicle.

3.2.3 Storage

The body should be stored in dry and rain-free environment.

The body shouldn't be stored in direct sunlight.

KONTROLSÜZ KOPYA

3.3 Installation on the Vehicle Chassis by the Customer

3.3.1 Packaging

No packaging is made even if the bodies are installed on the chassis by the customer.

3.3.2 Transportation

If the body fits into a lorry container, it is shipped with a container.

If the body does not fit in a lorry container, it is transported with an open trailer truck or via ship.

During transportation, the back cover of the body is placed in an open manner to save space.

During transportation, there must be a distance of at least 2 - 5 cm with the truck and the sides and top of the truck or container in which the body is placed

3.3.3 Storage

The body should be stored in dry and rain-free environment.

The body shouldn't be stored in direct sunlight.

The body should be stored in environment that is free from acid, base, salt, chemicals, radioactive material.

The body should be supported by placing wooden wedges under it.

Up to 2 bodies can be placed on top of each other.

Stacking more bodies will result in deformation. This will not be covered by the warranty.

3.3.4. Commissioning

In the vehicles delivered to our customers, the first equipment installation is carried out by Orakçı Machinery training personnel by giving practical training. It must be commissioned in this manner.

KONTROLSUZ KOPYA

4. USER'S MANUAL

4.1 SAFETY

4.1.1 SAFETY WARNINGS

Safety warnings are used throughout this manual to indicate danger, caution and warning statements. Follow these instructions to reduce the possibility of personal injury and property damage. The terms danger, caution, and warning refer to various degrees of personal injury and property damage that could occur if instructions are not followed.

The warning signs that may appear in this manual or equipment are provided below.

DANGER!

*"**DANGER**! refers to a hazardous situation which, if not avoided, will result in death or serious injury.*

CAUTION!

*"**CAUTION**! refers to a potentially hazardous situations which, if not avoided, could result in death or serious injury.*

WARNING!

*"**WARNING**!" sign reminds the user of important information required for proper operation of the equipment.*

Always apply safe handling and maintenance methods.

Orakçı Machinery, cannot anticipate all potential hazards that may arise during the use of the equipment or due to misuse. Therefore, it should be noted that not all warnings are included in this operating and maintenance instruction as well as warnings on the equipment. All safety precautions must be taken by the user.

KONTROLSUZ KOPYA

If the use or maintenance method is not applied as specifically recommended by Orakçı Machinery ensure that the method applied is safe for the user and those around. However, also ensure that the operation or maintenance method you have chosen will not damage the equipment.

Orakçı Machinery makes every effort to ensure that the equipment is in line with the regulations in your country or region. However, if your equipment is not purchased through an authorized dealer, it may not have the equipment required by the regulations. It should be known that Orakçı Machinery is not responsible for such equipment.

In addition, some local activities or specific tasks may require special equipment that has not yet been provided. For further information or assistance, contact your nearest Orakçı Machinery representative or an authorized dealer.

No liability can be accepted for printing errors and omissions in the manual. When a similar situation is encountered, please contact Orakçı Machinery.

4.1.2 SAFETY WARNING LABELS AND PLACES OF USAGE

4.1.2.1 Definitions

All of the safety signs on the equipment are shown below. Read and fully understand them. These markings contain important information for safe use and maintenance. Follow the instructions on the safety signs carefully.

It is very important that all safety signs are located as shown. If any of the signs are missing or damaged, purchase a spare from the ORAKÇI dealer and place it in the right place.

NOTE: The sample safety signs in this section are provided with part numbers to help you and your dealer find the right spare part.

KONTROLSÜZ KOPYA

4.1.2.2 Places of Usage

KONTROLSÜZ KOPYA

Image 27: *Display of Label Areas*

KONTROLSUZ KOPYA

Image 29: Display of the Uses of the Labels

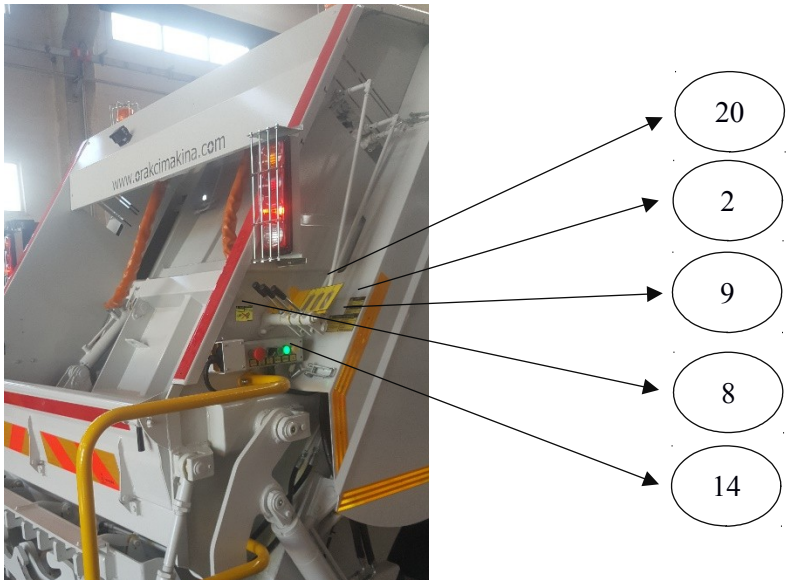

Image 28: Display of the Uses of the Labels

KONTROLSUZ KOPYA

The List of Labels:

Ref	Feature Code	Explanation	Optional	Piece
1	ORVALLETPSAA001	Lubrication Label	S	1
2	ORVALLETPSAA002	Employee Warning Label	S	2
3	ORVALLETPSAA003	Rear Control Handle Warning Label	S	1
4	ORVALLETPSAA004	In-Vehicle Driver Warning Label	S	1
5	ORVALLETPSAA005	Tailgate Lifting Warning Label (Left)	S	1
	ORVALLETPSAA024	Tailgate Lifting Warning Label (Right)	S	
6	ORVALLETPSAA006	Repair Cap Label	S	2
7	ORVALLETPSAA007	Maintenance Instructions Label	S	1
8	ORVALLETPSAA008	Pressure Water Warning Label	O	6
9	ORVALLETPSAA009	Loading Warning Label	S	1
10	ORVALLETPSAA012	Discharge System Warning Label	S	1
11	ORVALLETPSAA013	Emergency and Driver Warning Button	O	1
	TMOALLETPSAA003	Driver Warning Button Label		
12	ORVALLETPSAA014	Cycle Increase and Automatic Action Label	O	1
13	ORVALLETPSAA015	Emergency Stop Button Label	O	2
14	ORVALLETPSAA017	6-Buttons Label (Standard)	O	1
	ORVALLETPSAA030	6 Buttons Label		
15	ORVALLETPSAA018	Two Hand Button Label	O	1
16	ORVALLETPSAA019	Double Hand Movement Button Label	O	1
17	TMOALLETPSAA001	Warranty Label of Stress Adjustment	S	1
18	TMOALLETPSAA002	Oil Tank Label	S	1
19	ORVALLETPSAA025	History Label	D	1
20	ORVALLETPSAA028	2-Way Control Handle Label	O	1
	ORVALLETPSAA027	3-Way Control Handle Label		
	ORVALLETPSAA029	2-Way Skiploader Label		

KONTROLSÜZ KOPYA

Table 6: Tabel of Labels

4.2 Safety Precautions

Operator Safety:

Before using the equipment, read the User's Manual and make the necessary preparations safely.

Be aware of the location and meaning of the safety signs on the equipment. Report missing or unreadable signs and have them replaced

The refuse truck should be operated by an authorized and trained operator.

In order to use the equipment safely, please abide by the following items.

- Do not use the equipment when you are extremely tired
- Do not use the equipment if you are taking medication that can cause sleepiness.
- Do not use the equipment while under the influence of alcohol or medication..
- Wear safe clothing. Tight or loose-fitting clothing can be caught in mechanical zones or control equipment.
- It is recommended that you wear the protective clothing required by the work or conditions, as indicated in the following sub-items.
    - Gloves
    - Steel toe shoes
- Do not wear jewelry that could be get stuck to mechanical zones or control equipment or could short-circuit and cause a fire if in contact with electrical parts.

KONTROLSUZ KOPYA

Safety Precautions Before Operation:

- Do not operate the equipment without sufficient hydraulic oil.
- Know the location and methods of use of safety equipment.
    - Fire extinguisher
    - Fire Blankets
    - First aid kits
    - Telephone numbers to be called in case of emergency
- Examine the status of the safety components and have them corrected in case of non-compliance.
    - Missing or illegible safety signs
    - The Vehicle rearview mirror is missing or broken
    - If the warning lamp or signals on the equipment are broken or not working
    - Reflectors are missing or broken.

Make sure that the safety devices are in working order and in the right places.

- Reverse gear (buzzer): Ready
- Parking brake: Pulled
- Emergency Stop buzzer: Ready

- Driver warning horn: Ready

Safety Precautions During Use:

Safety of the Area:

- Keep the people in the vicinity away from the working area of the tailgate and bin lifter.
- When working on an inclined surface:
  - Pull the parking brake.
  - Do not release the service brake.
  - Never leave the driver's seat.
  - Do not lift the tailgate
  - If not necessary, do not work on an inclined surface.
  - Never go downhill without starting the engine. This will jeopardize operators standing in the rear step
  - When going downhill, shift to a lower gear as you would going uphill. This enables the engine to brake.
- Do not operate the equipment in road conditions that could cause the vehicle to skid.
- Never travel in the rear step in road conditions that could cause the vehicle to skid.
- The operating temperature of the equipment is between -25°C - 45°C.
- Keep the equipment away from areas subject to fire and sparks, as the loaded waste is flammable and explosive.
- When working in confined spaces:
  - Check that there is sufficient clearance to buildings and sidewalks.
  - Do not operate the equipment on the sidewalk
  - Do not lift the tailgate

NOTE: *Do not lift the tailgate except in maintenance stations and waste disposal sites.*

Safety precautions during normal operation:

- Vehicle Engine Speed should automatically operate at the speed determined by ORAKÇI MACHINERY (Maximum PTO output speed: 1000 rpm) Otherwise, the Warranty Certificate of the product will become invalid.
- There is limited vision of the rear. Always take special precautions when reversing.

KONTROLSUZ KOPYA

- The clutch must be used to activate and deactivate the PTO
- Never move the vehicle when the power take-off is activated. Moving the vehicle while the power take-off is activated will cause serious damage to the vehicle.
- The equipment is for household waste management only. If used for hard materials outside the scope of domestic waste, it may cause serious problems to the equipment. The guarantee is for production defects and this will not be covered by the warranty.
- Do not attempt to load more than the capacity of the body.
- If the equipment is used for purposes other than those specified in the operating and maintenance manual, hazards not specified in this manual may occur. Follow the written instructions.
- Driving the equipment on the road,
    - Drive as fast as conditions and safety conditions allow.
    - Be aware of and observe the local regulations regarding the rotating beacons and lighting.
    - Avoid sudden brakes, sudden starts and sudden maneuvers. This movement will endanger the operators on the rear steps.

KONTROLSUZ KOPYA

Safety precautions when parking:

- Stop the equipment on a flat surface.
- Pull the park brake
- To prevent unauthorized use;
    - Get the ignition key
    - Lock the main key and take the key with you
    - Make sure all doors and windows are closed and then lock them.
    - Inspect the equipment and inform the authorized company about any repairs you may require.

4.3 Safe Maintenance

In case of changes in the pressure settings of the hydraulic system specified in the Operation, Maintenance and Spare Parts Manual, the Vehicle will be excluded from the Warranty

Safety precautions to be taken before maintenance:

Only carry out maintenance and repair work if you have been trained to do so. Pay attention to the instructions and information in the operating and maintenance manuals.

- Wear safety clothing to carry out maintenance.

  - Tight clothes should be preferred (Loose clothes are dangerous to work)
  - Wear protective clothing as required by the work or the conditions, as outlined in the following subsections.

    - Gloves
    - Steel toe shoes
    - Eyes/Face Protection

- Do not wear jewelry that could be get stuck to mechanical zones or control equipment or could short-circuit and cause a fire if in contact with electrical parts.

- When the tailgate of the body is lifted, immediately insert the tailgate support for safety. Do not enter underneath the open tailgate before placing support rod.

- Before performing maintenance;

  - Park the vehicle on a flat surface
  - Apply park brake.
  - Stop the engine
  - Place chocks in front of the wheels.

- Never repair parts containing pressurized hydraulic fluid. Release all compressed hydraulic pressure as follows.

  - Stop the engine
  - Reset the hydraulic pressure by pressing the corresponding control levers.

- Place "**DO NOT USE**" or "**DO NOT START**" card on the ignition key.
- Use balanced supports when working under any mechanical zone. Do not rely on hydraulic cylinders or attachments.

- Do not stand on the wheels. Use reliable and durable work platforms.

- Drain all hydraulic oil into suitable containers. Keep containers in a well-ventilated place out of the reach of unauthorized persons

- Hot oils can cause burns. Allow components to cool to a safe degree before maintenance. Then drain the oil.

- Before maintenance, clean the equipment so that it is completely free of waste.

- To prevent environmental pollution, dispose of used oil in accordance with municipal regulations.

KONTROLSUZ KOPYA

- Keep people away from the maintenance area.
- You should carry out periodic maintenance of the vehicle and body at specified period. Look at the maintenance Instruction List for periodic maintenance of the case.

4.3.1 Warnings :

ALWAYS / NEVER

ALWAYS Check that machine maintenance is done on time

ALWAYS Check that the machine operations are correct!

ALWAYS If it does not compress, check the pressure switches!

ALWAYS Have a second person with you for stop control in case of a problem or during maintenance!

ALWAYS If the tailgate is open, install the rear safety bar!

ALWAYS In the compression position, keep the rear filler and blade clean!

NEVER Do not enter the chamber during compression!

NEVER Don't enter the body and tailgate while the vehicle is operating

NEVER Do not have unauthorized persons carry out controls!
NEVER With the tailgate is at its top position, do not walk underneath it or do any work without the support rod!
NEVER Do not enter the body without a support rod on the tailgate!

NEVER Do not operate the machine if the wrong mechanism adjustment is set or in case of damage!

NEVER Do not load waste to levels above the support rail height!

KONTROLSUZ KOPYA

4.4 Instruction Manual

The equipment manufactured in accordance with standards (TS EN 1501-1 + A1) is not applicable for the following.

- Temperatures above + 40 ° C and below -25 ° C,
- Tropical climates
- Winds exceeding 75km/h
- Polluting environment
- Corrosive medium
- Potentially explosive environments,

- Handling of cargoes that can lead to hazardous situations (e.g. hot wastes, acids and bases, radioactive substances, contaminated wastes, especially fragile loads, explosives)
- Work on ships

4.5 Terms Of Use

Before using the Refuse Compactor Body, use, maintenance and spare parts catalogs should be reviewed.

Refuse Compactor Body consist of a simple and easy to use system.

Refuse Compactor Bodies consist of the following units:

1. Waste Collection Chamber
2. Slide Blade System
3. Ejection Panel
4. Tailgate
5. Hydraulic System
6. Waste Loading Bin Lifter

KONTROLSÜZ KOPYA

These units operate with two groups of hydraulic (control valve) operating arms:

The front control valve (operating arm) is hand operated and has two levers. The first lever operates the ejector plate and the telescopic cylinder. The second lever operates the tailgate cylinders.

The rear control valve (operating arm) operates the slide- blade mechanism and bin lifter. With increasing the number of valves, it can be controlled by adding Skiploader arms, crane etc. according to the desired optional features.

Apart from directional control valves, safety valves are also included in the system. These hydraulic valves are connected to a control and regulating valve. Settings for these have been set by the company and should not be changed to ensure proper system operation.

Before starting the vehicle, check the oil level and oil leaks. Before starting to collect garbage, it is operated by clutch with the electric switch located at the driver's seat. The clutch is released slowly. Thus, power take-off pump connection is provided.

The ejector plate should be located approximately one meter behind the body. The compaction plate must be in an upper position while waste is being emptied into the hopper. Filling the hopper is performed either manually or with a container. The emptying of the container takes place by operating the bin lifter with a hydraulic valve. Two container holding arms are opened for inserting the container. The wheeled bin is pushed onto the arms. Points to be considered during this process are as follows:

- Do not stand in front of the moving part during the operation of the arms.
- The working part must be avoided during operation of the compaction plate.

The garbage is taken into the garbage collecting hopper by means of the slide-blade system. The slide-blade system is operated by a hydraulic valve. When the hopper is full, the control of the blade with the control handle is ensured and the waste in the bin is compressed. Then the

compressed garbage is pulled into the container body. This system continues with an electronic cycle.

Following the waste collection in the hopper is finished, declutch in order to cut contact between P.T.O and Pump. Otherwise, P.T.O pump life will be shortened and oil will overheat.

The tailgate opens and waste is emptied with the help of a hydraulic pre-control valve. First the tailgate should be opened, then the discharge plate should be operated. When opening the tailgate, nobody should be in the rear end. After unloading, the discharge plate is retracted and the rear side is cleaned. (The tailgate support rod should be fitted during this operation.) And tailgate is lowered, the vehicle is cleaned.

During the first months of operation, the body connections of the compacted waste container must be tightened.

During hydraulic system operation, the PTO output should be 1000 rpm.

When the tailgate is open, the truck cannot move

4.6 Use of Garbage Equipment

The use of hydraulic rear-loader refuse equipment will be explained with the assumption that the body is completely empty.

4.6.1 Loading Garbage with Bin Lifter (optional)

The bin lifter is used for small volume waste containers for household waste. The usage is as follows:

- The refuse truck goes to the container where it will collect the garbage. (Step 1)
- The operator places the container on the lifting device. (Lifting Device: It is a hydraulic controlled system which holds the handles on the side of the container, lifts it in a circular motion and empties the garbage into the loading hopper.) (Step 2)
- The operator lifts the container with the hydraulic system and empties the waste into the loading hopper. Because it is compressed in the container, it can drop the debris into the loading hopper by moving the hydraulic system up and down. (Step 2)
- It places the container on the ground using the hydraulic system. (Step 3)
- Removes the container from the lifting device. (Step 4)
- The refuse truck moves to unload the next container.

Bin Lifter System:

- Suitable for 0,4 m³, 0,8 m³, 1,1 m³ Metal Containers

  Waste is loaded with 120lt, 240lt, 360lt, 770lt, and 1100lt plastic containers with appropriate bin lifter arms.

We also have special bin lifter designed according to customer request. For these bin lifter, spare parts codes are not included in the manual. Please contact customer representative for spare parts requirement.

KONTROLSUZ KOPYA

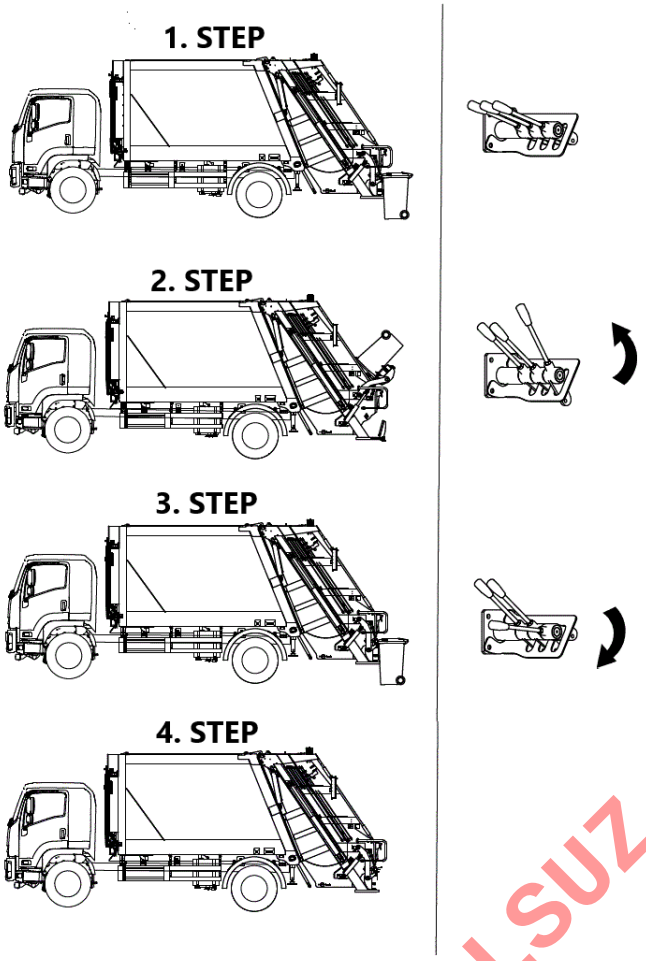

Image 29 : Garbage Loading with Bin Lifter

KONTROLSUZ KOPYA

4.6.2 Garbage Loading with Skip Loader Arms (Optional)

The Skip Loader Group is a system designed for the collection of household waste in a large industrial waste container. It is designed for 4m³ and 6 m³ containers.

- The refuse truck goes to the industrial container where the garbage is to be collected. (Step 1)
- The weight of the industrial waste container must be known. Garbage containers should be taken at the loads permitted by Orakçı Machinery.(1,600 kg for 4m³ and 2,400 kg for 6m³). If Skiploader Stabilizer were provided by Orakçı Machinery, Skiploader Stabilizer should be opened after going to the garbage container. (Optional) (Step 2)
- After the legs are opened, the Skiploader arms are lowered and connected to the container with the help of chains. (Step 3)
- The container is lifted with the Skiploader arms and emptied into the hopper. (Step 4))
- The unloaded container is lowered with the help of Skiploader arms. (Step 5)

- Arms are lifted by removing the chains. (Step 6)
- Legs are lifted in order to continue waste collection at the next container. (Step 7)

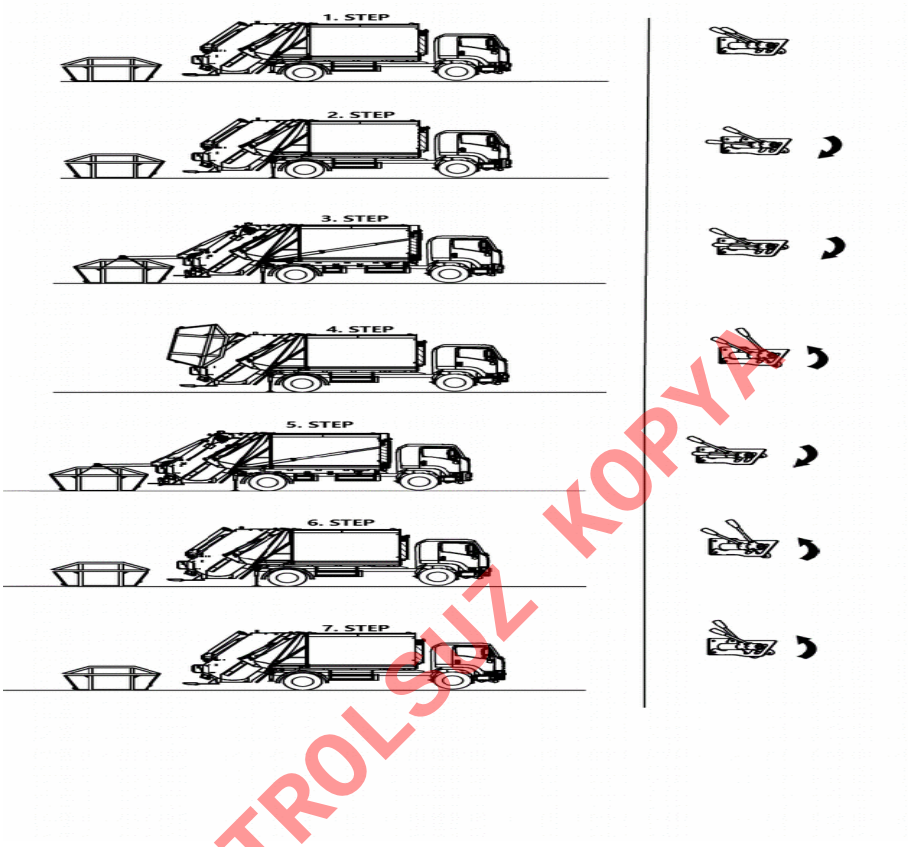

Image 302: Garbage Loading with Skip loader Arms

KONTROLSÜZ KOPYA

4.6.3 Operation of the Plate-Shovel System

This system, which works together as a plate and shovel, ensures that the trash contained in the loading hopper is taken inside the body.

- Garbage emptied from the waste containers is collected in the loading hopper. (Step 1)
- When the loading hopper is full, compaction plate is activated . (Step 2)
- The system is lowered into the hopper with the help of the shovel system. (Step 3)

The garbage in the hopper is swept and compressed with the help of the blade.

- With the help of the slide, the trash is compressed and stored. (Step 5)

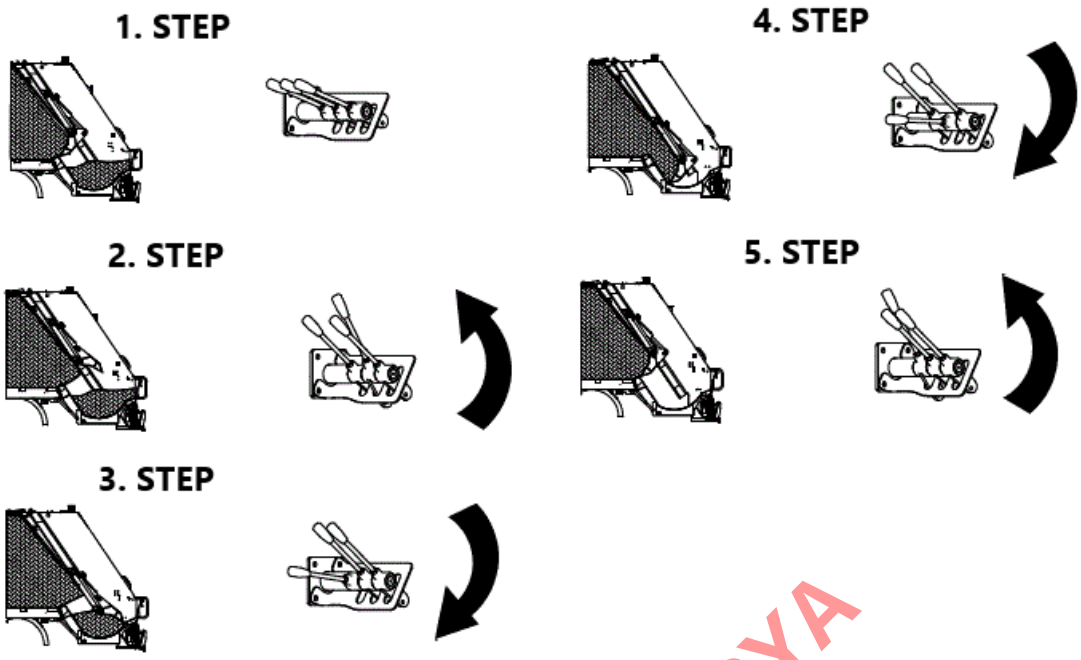

Image 31: Operation of Packer Blade and Carrier Plate System

KONTROLSUZ KOPYA

4.6.4 Loading System

Loading System is the system that provides the collection of garbage by compressing the garbage in certain proportions with differential pressure.

- Loading begins by emptying the trash into the loading hopper. (Step 1)
- Garbage in the hopper is swept with the help of packer blade and carrier plate system. (Step 2)
- The garbage from the hopper is swept by the packer plate and pulled into the container body. (Step 3)
- The trash retained by the ejector plate at a certain pressure in the hopper is combined with the trash collected for compaction, and a differential pressure between the slide-blade system and the ejector plate is applied for compaction of the trash. (Step 4-5)
- When the slide-knife system overcomes the support pressure of the ejector plate, the ejector plate to the hydraulic oil tank located in the ejector plate piston. Thus, the waste is compressed and the equipment is filled with compressed waste. (Step 5-6)

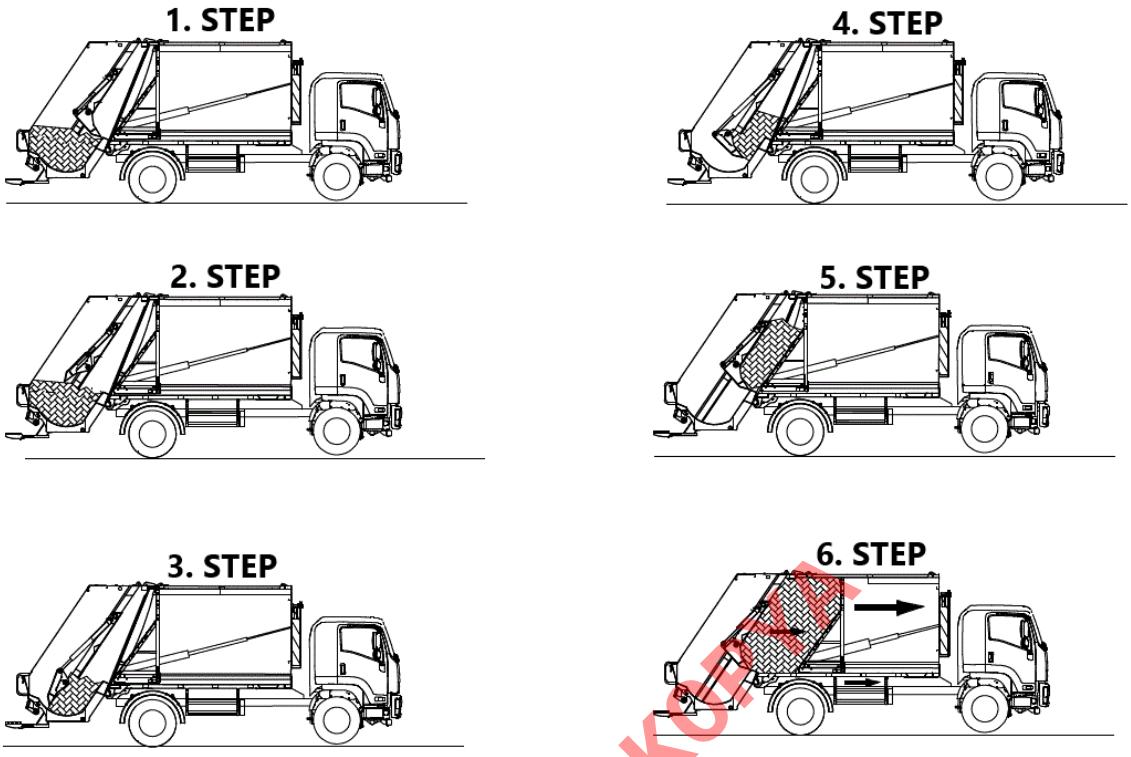

Image 32: Loading System

KONTROLSUZ KOPYA

4.6.5 Discharge System

It is a system made for discharging garbage that is compressed into the equipment.

- When the body is completely filled with waste, the ejector plate movement causes a counter-pressure force causing the slide-blade system to end the compacting process. This can be seen from a warning system installed in the vehicle according to customer requirements, or if the compaction plate remains standstill. (Step 1)
- The vehicle travels to the dump site and the tailgate is opened. (Step 2)
- When going to the discharging area, there should be no trash inside the tailgate loading hopper. After the tailgate is opened, discharging is performed with a forward movement of the ejector plate. (Step 3)
- After discharge, the ejection is retracted to a minimum of 50 cm. (Step 4)
- After the Ejector Plate is retracted, the tailgate is closed to a certain point for cleaning. The tailgate support rod is installed for cleaning. Then, the body sealing strip and the discharge area of the seal must be cleaned. (Step 5)
- After cleaning, the tailgate is closed and the waste filling preparation position is taken. (Step 6)

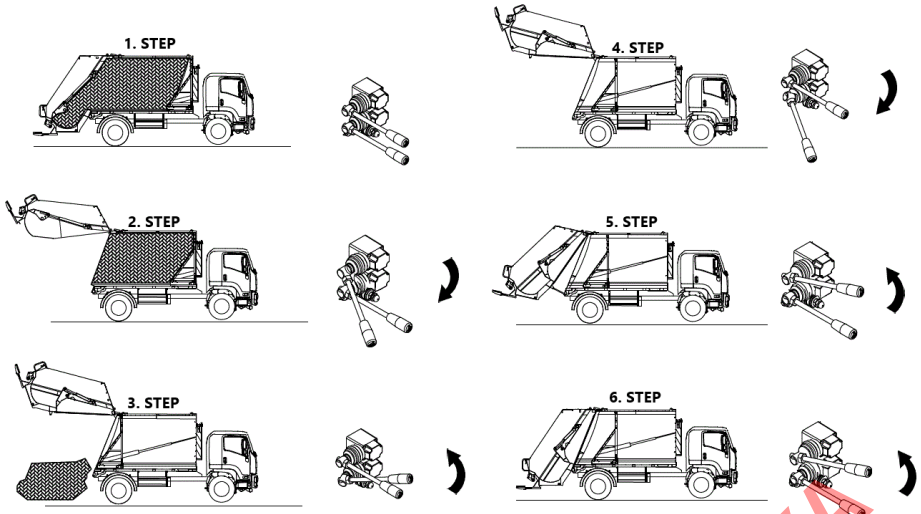

Image 33: Demonstration of the Discharge System

KONTROLSÜZ KOPYA

4.7 Command and Controls

Button and button boxes are optional and may vary according to customer requirements, European waste equipment standards, or standards of the country where the equipment will be used.

4.7.1 Right Control, 6-Way Control Unit

The 6-Way Electrical Control Unit is located on the right side of the Tailgate.

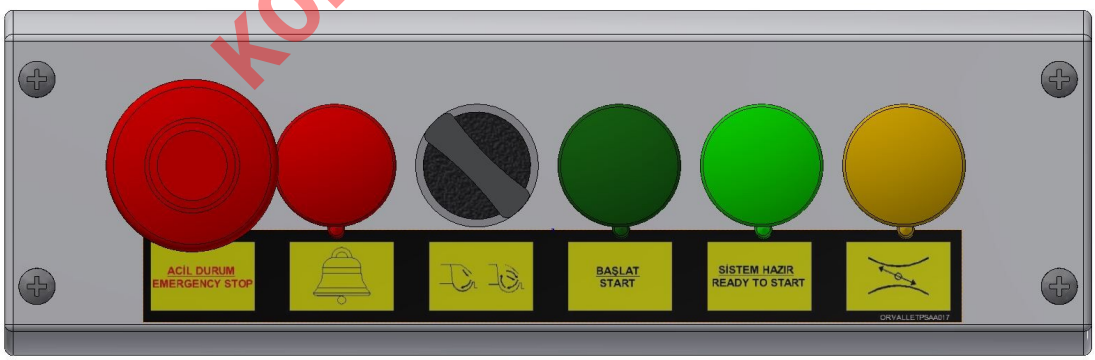

Image: 34: 6-way control box

This control box,

- It is an optional feature and the buttons can be increased or decreased according to the customer's request.
- It allows the operation of the garbage bin to work as Single Loop or Automatic (Continuous Loop). (Black Button)

- The Start button enables the system to operate. (Green Button)
- Emergency Stop Button stops the system. (Red Pull Button)
- The Buzzer Button (One-Hit Dashed Sign) is used to communicate with the driver and other employees. (Red Button)
- The system ready button is used to indicate that the system is ready for operation (Green Led Light)
- The Speed Button gives gas (speed) to the system to enable the movement of the Tailgate and the Discharge Plate in the Vehicle. (Yellow Button)

4.7.2 Two-Hand 4-Way Control Box

Two Hand 4-Way Control Box is located on the left side of the tailgate.

KONTROLSUZ KOPYA

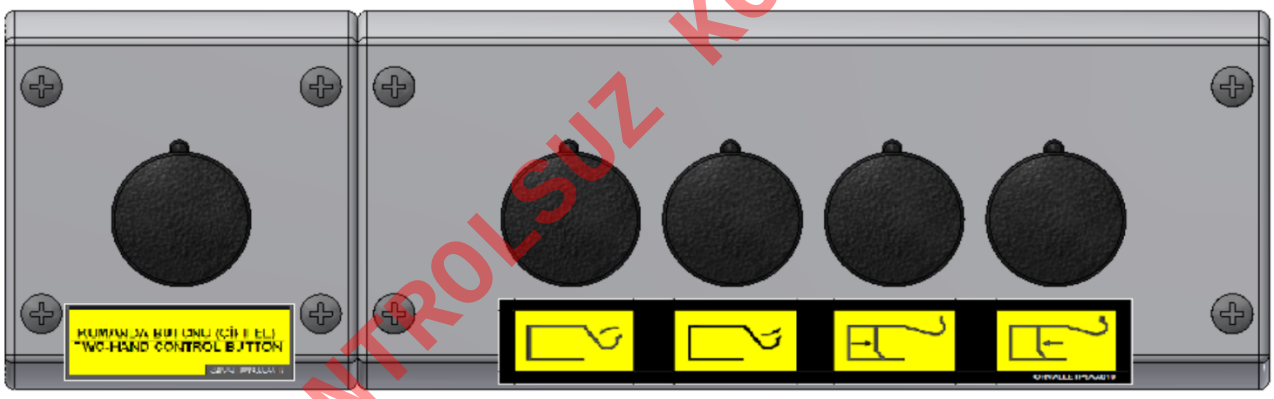

Image 357: 4-Way Control Box

This Control Box;

- It is set in such a way that the function of other buttons cannot be activated without pressing the single button on the left side.
- After pressing the single button to the left, the 1st Button performs the Tailgate Lifting operation.
- After pressing the single button to the left, the 2nd Button performs the Tailgate Lowering operation.
- After pressing the single button to the left, the 3rd Button performs the Ejector Plate Forward operation.
- After pressing the single button to the left, the 4th button performs the Ejector Plate Retract operation.
- This control box is used when the filled hopper is to be emptied.

.

4.7.3 2-Way Control Box

The 2-Way Control Box is located on the Left Side of the Tailgate and on the Rear Left of the Tailgate.

Image 36: 2-way Control Box on the left

KONTROLSUZ KOPYA

On this 2-Way Control Box on the Left side of the Tailgate,

- The buttons to be placed on this control box vary according to the customer's request. (Optional)
- There is an emergency stop button on this control box.
- This button enables the system to be stopped. (Emergency Stop Button with Red Latch)
- This control box is equipped with a Bell Button (One-Hit Dashed Mark). This button is used to communicate with the driver and other employees. (Red Spring Button)

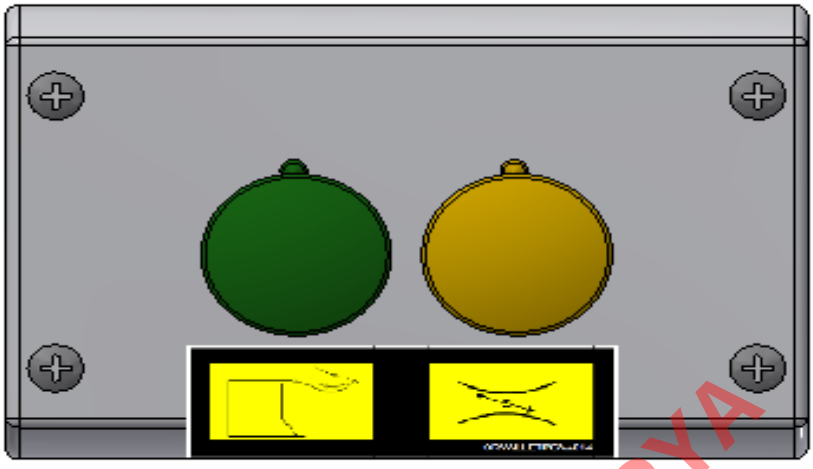

Image 37: *2-way Control Box on the left*

KONTROLSUZ KOPYA

2-Way Control Box on the back-left side of the Tailgate,

- The buttons to be placed on this control box vary according to customer request. (Optional)
- This control box has a speed switch. This button gives gas (speed) to the system to enable the movement of the Tailgate and Discharge Plate on the Vehicle. (Yellow Spring Button)
- This control box has a start button with the Tailgate up. This button is used to start when there is a substance trapped in the hopper when the tailgate is up. (Green Spring Button)

4.7.4 Single Yellow Emergency Stop Control Box

The Single Yellow Emergency Stop Control Box is located inside the tailgate hopper on both the right and left side, and within the reach of the operator.

Image 38: Single Yellow Emergency Control Box

KONTROLSÜZ KOPYA

On This Control Box,

- The Rescue button allows the Compression plate to be raised in case of a possible accident. When the Compression plate is raised, it stops by contacting the switch. Thus, the system provides a power cut. After the fault is cleared, the start button must be pressed again in order for the system to restart. (Yellow Latch Emergency Stop Button)

4.7.5 Driver's Cab Control System

The driver's place control box is located in the vehicle cabin. This control is optional and can be selected as touch screen (Digital), manual button (Analogue).

Analog Control Panel;

KONTROLSUZ KOPYA

Image 39: Representation Cab Control System

- The buttons to be placed on this control box change according to the customer request (Optional)
- The main switch provides electricity to the system.
- Work Light Button, this button enables the working lamp in the garbage truck to work.
- Rotating Beacon Button, this button enables to work the flashing lamp in the garbage vehicle
- 1.Button Tailgate and Ejecting Panel operation safety lock switch
- 2. Button performs Tailgate Up
- 3. Button carries out the ejecting panel forward operation.
- 4. Button realizes Automatic Start operation.

Digital Control Panel;

Image 40.: Representation Cab Control System

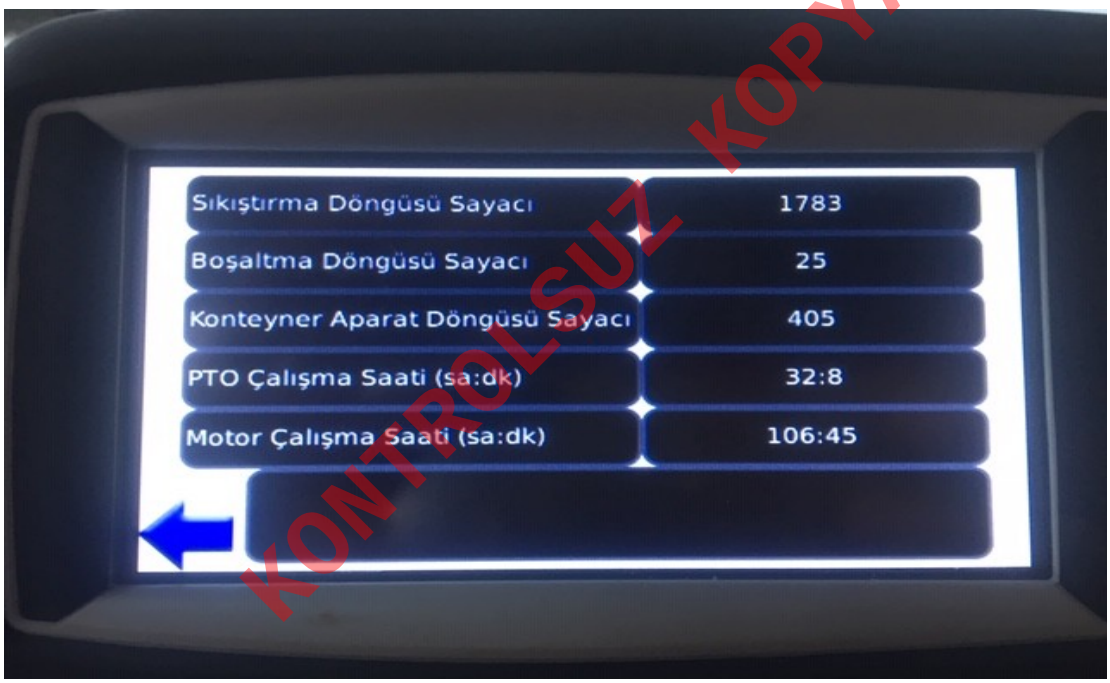

KONTROLSUZ KOPYA

Image 41.: Representation Cab Control System

- The buttons to be placed on this control box change according to the customer request. (optional)
- With this control box, a connection is established between the CANBUS communication system and the vehicle and equipment, operation monitoring is facilitated and the working time of the equipment can be recorded.
- Work Light Button; this button enables the working lamp in the garbage truck to work.
- Rotary Lamp Button; this button enables the flashing lamp in the garbage truck to work.
- The informative images on the screen change according to the customer request.

5. TROUBLESHOOTING AND MAINTENANCE

Before starting maintenance, take precautions against any hazards that may occur. Maintenance or repair of the equipment should only be carried out by trained or experienced personnel.

5.1 HYDRAULIC OIL USE AND LUBRICATION CHART

Use hydraulic oil with foam, rust and anti-oxidation and anti-wear additive

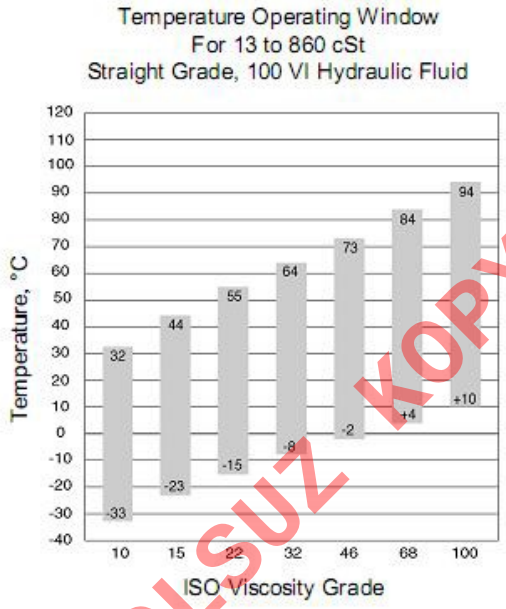

Image 44: Schema of Hydraulic Oil

KONTROLSUZ KOPYA

Suitable oil should be selected according to the above-mentioned operating temperatures.

Frequently used hydraulic oil types are ISO46/ ISO68

ISO32 oil can be used in colder and lower operating temperatures. (Viscosity for hot countries is 68, for cold countries is 32 and for Turkey it is 46.)

Grease Lubrication is performed at points exposed to wear. The lubrication points are shown on the label ORVALLETPSAA001. Observe the lubrication intervals specified in the maintenance table

The system must use hydraulic oil as specified in the operating instructions. The following table lists the hydraulic oil brands.

Petrol Ofisi	Hydro Oil hd 68	Hydro Oil HD 46	Hydro Oil HD 32
BP	Energol HLP 68	Energol HLP 46	Energol hlp 32
Shell	Tellus S2 M 68	Tellus S2 M 46	Tellus S2 M 32
Castrol	Hyspin-AWS 68	Hyspin-AWS 46	Hyspin-AWS 32
Total	Azolla ZS 68	Azolla ZS 46	Azolla ZS 32

Table 7: Hydraulic Oil Brands

The oil in the oil tank should be checked daily. When the cylinders are closed, the oil level should be in the upper area of the gauge. The return filter must be replaced after the first 48 hours of operation.

The return filter must be replaced every time the oil is change.

Hydraulic oil should be changed every 1000 working hours or every 6 months. (Whichever comes first)

After the equipment is used, the connecting shafts and bushings must be lubricated with grease (Calcium Based Industrial Grease Nos. 1 and 2).

Lubrication should be done in the periods specified in the table below.

This lubrication label is located on the equipment.

KONTROLSUZ KOPYA

ORAKÇI

YAĞLAMA BÖLGELERİ
LUBRICATION POINTS

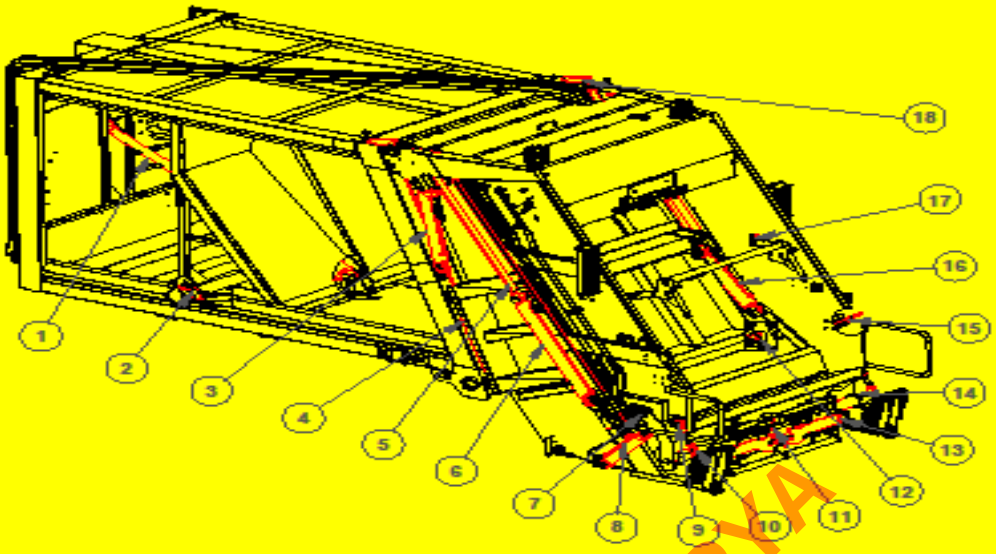

	YAĞLAMA BÖLGELERİ LUBRICATION POINTS	YAĞLAMA PERİYODU LUBRICATION PERIOD	MİKTAR AMOUNT (Gr.)
1	TELESKOBİK PİSTON MİLLERİ TELESCOBIC CYLINDER SHAFTS	HAFTADA BİR ONCE A WEEK	30
2	İÇ KÜREK RAYLARI EJECTOR PANEL RAILS	HAFTADA BİR ONCE A WEEK	300
3	ARKA KAPAK PİSTON MİLLERİ AILGATE CYLINDER SHAFTS	HAFTADA BİR ONCE A WEEK	30
4	ARKA KAPAK SIZDIRMAZLIK LASTİK YÜZEYİ TAILGATE SEALING RUBBER SURFACE	HAFTADA İKİ TWICE A WEEK	250
5	ARKA KAPAK KIZAK RAYLARI TAILGATE SLIDE RAILS	HAFTADA İKİ TWICE A WEEK	150
6	KIZAK PİSTON MİLLERİ SLIDE CYLINDER SHAFTS	HAFTADA İKİ TWICE A WEEK	60
7	KONTEYNER APARATI BAĞLANTI MİLLERİ BIN LIFTER MECHANISM CONNECTION SHAFTS	HAFTADA İKİ TWICE A WEEK	20
8	KONTEYNER APARATI PİSTON MİLLERİ BIN LIFTER MECHANISM CYLINDER SHAFTS	HAFTADA İKİ TWICE A WEEK	40
9	KONTEYNER APARATI KÜRESEL MAFSALLAR BIN LIFTER MECHANISM SPHERICAL JOINTS	HAFTADA BİR ONCE A WEEK	20
10	KONTEYNER APARATI ÇATAL BAĞLANTI MİLLERİ BIN LIFTER MECHANISM FORK CONNECTION SHAFTS	HAFTADA İKİ TWICE A WEEK	40
11	KONTEYNER APARATI KİLİT PİSTON MİLLERİ BIN LIFTER LOCKING SYSTEM CYLINDER SHAFTS	HAFTADA BİR ONCE A WEEK	30
12	BIÇAK İÇ BURCU BLADE'S INSIDE BEARINGS	HAFTADA İKİ TWICE A WEEK	60
13	KONTEYNER APARAT KOLLARI BAĞLANTI MİLLERİ BIN LIFTER ARM CONNECTION SHAFTS	HAFTADA BİR ONCE A WEEK	40
14	KONTEYNER APARATI GÖVDE YATAKLARI BIN LIFTER MECHANISM'S BODY BEARINGS	HAFTADA İKİ TWICE A WEEK	30
15	KUMANDA KOLU BAĞLANTILARI ACTUATING ARM CONNECTIONS	HAFTADA BİR ONCE A WEEK	20
16	BIÇAK PİSTON MİLLERİ BLADE CYLINDER SHAFTS	HAFTADA İKİ TWICE A WEEK	60
17	KAPAK AÇMA APARATI BAĞLANTI YATAKLARI TAILGATE OPENING CONNECTION SHAFTS	AYDA BİR ONCE A MOUNTH	20
18	ARKA KAPAK BAĞLANTI KOZASI TAIL GATE CONNECTION DRILLHOLE	HAFTADA BİR ONCE A WEEK	60

*TAVSİYE EDİLEN YAĞ : KALSİYUM ESASLI ENDÜSTRİYEL GRES NO: 1
*RECOMMENDED OIL : CALCIUM BASED INDUSTRIAL GREASE OIL NO: 1

ORVALLETPSAA001

YETKİSİZ KOPYA

Image 42: Lubrication Zones

5.2 Equipment Maintenance Chart

Equipment Maintenance Chart									
No	**Component / System**	**1. Week**	**Once a Day**	**Once a Week**	**Once a Month**	**Quarterly**	**Semi-Annually**	**Yearly**	**Service Control**
1	Hydraulic System	x			x				Check the connection records, tighten if loose.
		x					x		The hydraulic system suction filter must be replaced.
		x					x		The hydraulic system return filter should be replaced.
							x		Oil changes must be carried out at certain periods. (Viscosity for hot countries is 68, for cold countries is 32 and for Turkey it is 46.)
								x	Hydraulic oil should be drained, its tank should be cleaned and oil should be changed. (see. User Manual)
		x				x			Piston seal sealing check.
		x				x			System working pressure, Pressure switch settings etc. (see. Hydraulic circuit diagram)
2	Pneumatic Systems	x			x				Check valves, circuit elements, air tanks, connection fittings coils, if loose tighten and replace if damaged.
3	Electrical Equipments	x		x					Check if it is working properly. If there is a fault, repair it.
4	Safety Points	x				x			Check the safety device. (Camera, Step Sensor, etc.)

KONTROLSUZ KOPYA

5	Hydraulic Pump Connection, PTO Output	x		x					Check for leaks and operation, repair or replace if necessary.
6	Lubrication	x		x					Lubrication points must be greased according to the times specified in the table. (See User Manual)
7	Connection Joints	x			x				The stability and tightness of the joints must be checked.
8	Equipment Sections	x	x						After operation, the equipment must be checked for general cleanliness.
		x	x						Check that the working areas of the equipment are not damaged.
		x	x						Functional features should be checked.
9	Crane (Optional)	x				x			Check the oil level, If is necessary, add gear oil conforming to EN standards. (see. User Manual)
10	Castermid Plates	x				x			Check it, if it is worn, replace it with the original spare part
11	Moving Joints	x				x			Check it, if it is worn, replace it with the original spare part
12	Tailgate Sealing Rubber	x		x					Check it, if it is worn, replace it with the original spare part
13	Skip Loader and components	x			x				Check it, if it is worn, replace it with the original spare part
14	Ejecting Panel Tyres	x		x					Check it, if it is worn, replace it with the original spare part

Table 8: Equipment Maintenance Chart

KONTROLSUZ KOPYA

5.3 Malfunction– Cause – Solution Table

Sequence	Defect	Cause	Solution
1	There is no pressure in the system	Defect of PTO	ORAKÇI
		Hydraulic Pump Malfunction	
		Valve Malfunction	
		There is no oil in the oil storage tank	Add oil to the oil storage tank
		Suction filter is clogged.	Replace suction filter
		Ball valve in the suction line of the oil tank is closed.	Open the ball valve
2	Hydraulic pump vibrates while operating	The ball valve is closed in the suction line	Open the ball valve
		There is no sufficiently oil in the oil storage tank	Add oil to the oil storage tank
		Oil leaking from the suction line.	Tighten the suction line connections.
		There is a problem in the suction line	Check the suction line.
		Hydraulic pump malfunction.	ORAKÇI
3	The tailgate does not open.	Air in the hydraulic system	Remove air from the hydraulic system.
		Air in the suction line is clogged	Remove clogging or replace hose.
		PTO does not clutch	Check the plastic tubes
		Hydraulic pump malfunction	Check the PTO
		Hydraulic Pump does not	ORAKÇI

KONTROLSUZ KOPYA

		press oil Cylinder leaking oil	
4	The tailgate does not stop in the opened position.	There is oil leakage in direction control valves Defect of hydraulic cylinders	ORAKÇI
5	The tailgate does not close	Defect of tailgate safety valves	ORAKÇI
6	Ejecting Panel does not move	There is oil leakage in direction control valve Defect of telescopic cylinder Pressure is low Stuck of ejecting panel	Check the pressure ORAKÇI Check the friction block and sliders.
7	The ejecting panel does not discharge trash	There is oil leakage in the telescopic cylinders. Defect of direction control valve Under pressure	ORAKÇI Check the operating pressure
8	Ejector plate does not retract while garbage is being compressed.	Breakage of compression-discharge curtain friction wedges. The waste between the body and the curtain is compressing the curtain. Load holding valve is set to very high pressure	Check the friction wedges Clean around the curtain and grease the slides. ORAKÇI

KONTROLSUZ KOPYA

		Defect of telescopic cylinders	
9	The Slide and Packer are not moving.	Defect of direction control valve	Check for electrical current in coil valves.
		Air leakage in the system	Check for air in the system.

Table 9 : Defect Cause-Solution Table

5.4 Circuit Diagrams

The diagrams shared below cannot be shared or copied with 3rd parties. Otherwise, Orakçı Machinery may impose legal sanctions.

KONTROLSUZ KOPYA

5.4.1 Hydraulic Circuit Diagram

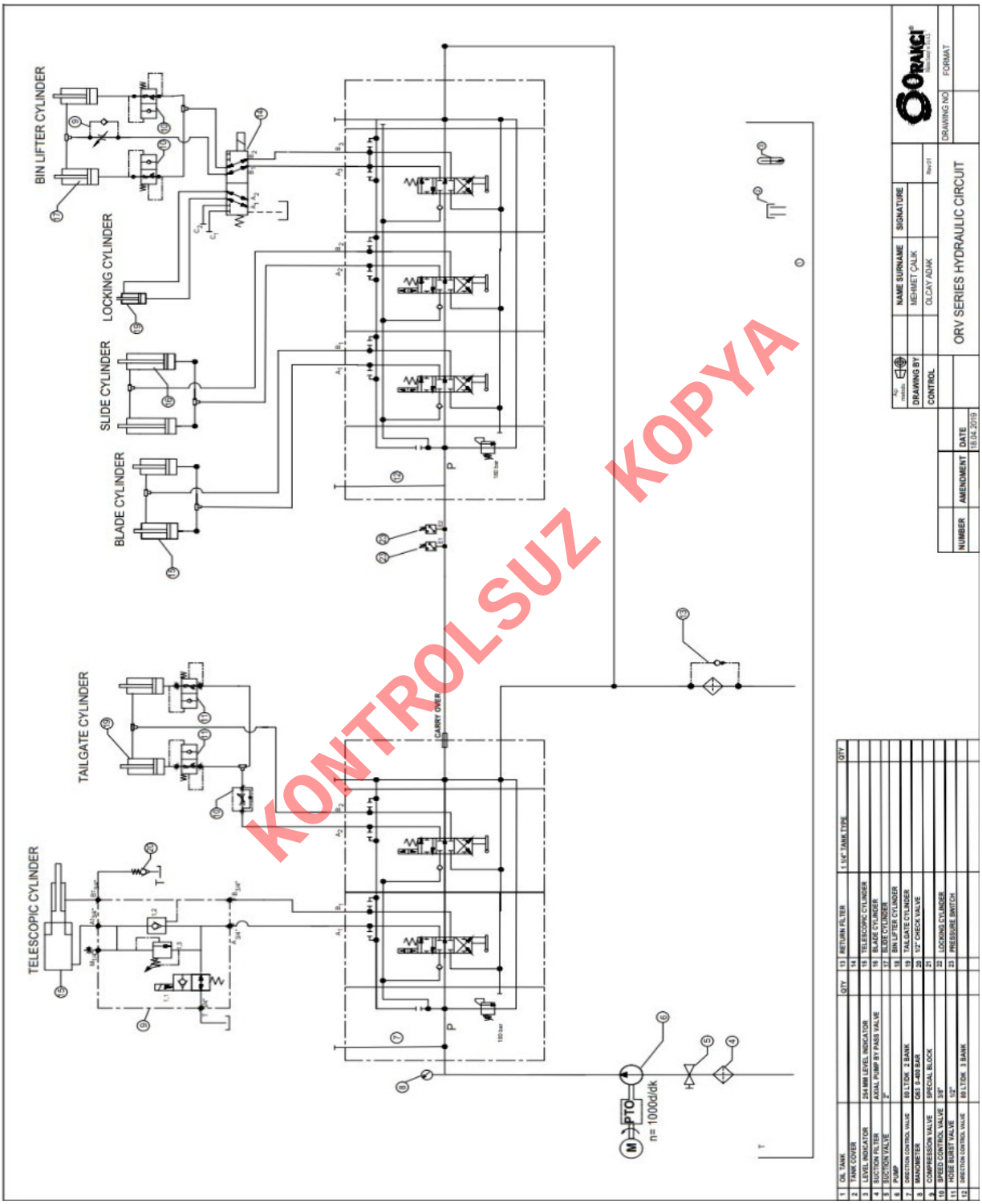

Technical Drawing 1: Hydraulic Circuit Diagram

5.4.2 Electric Circuit Diagram

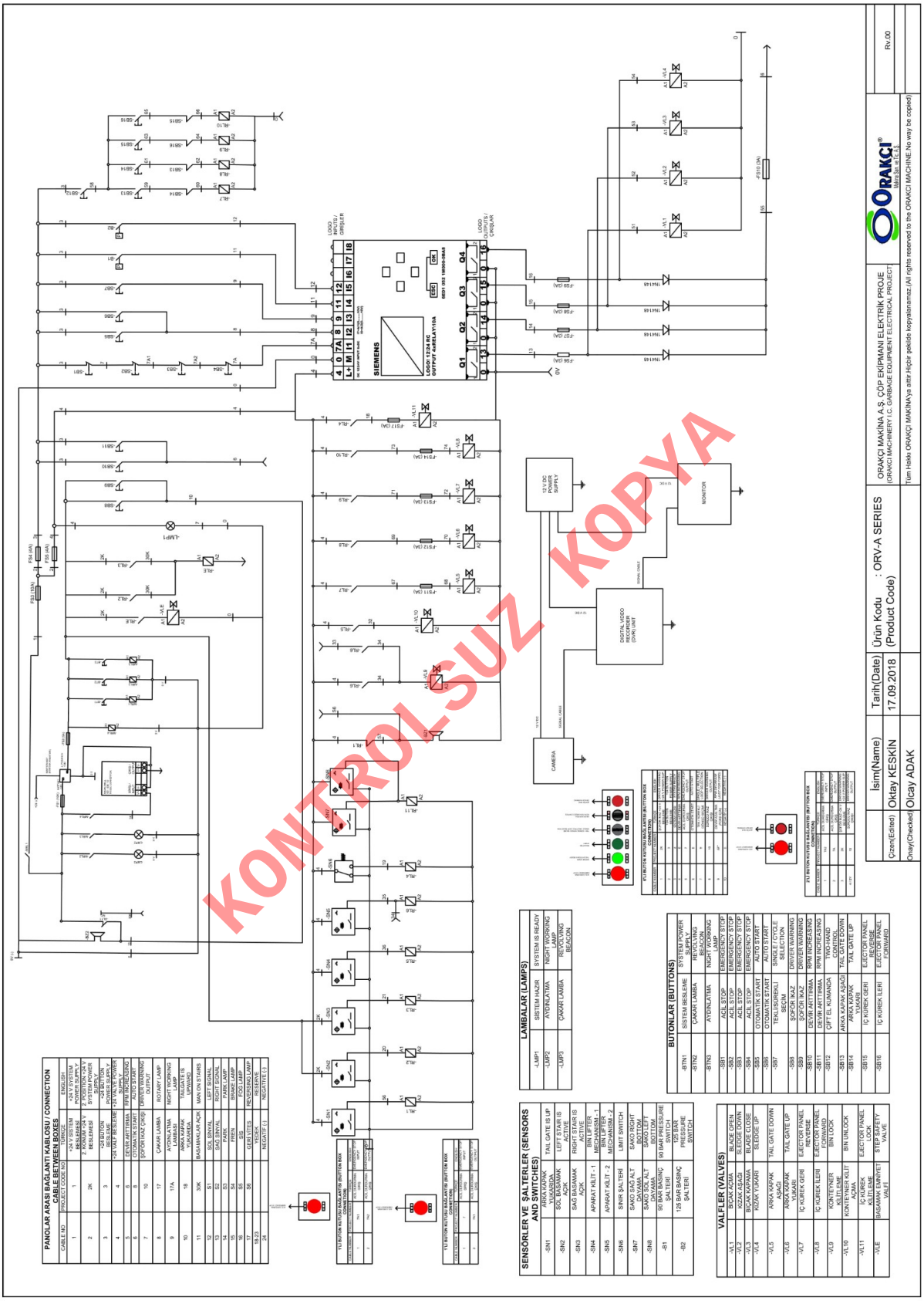

Technical Diagram 2 : Electric Circuit Diagram

6.SPARE PART LIST

6.1 Product Installation

6.1.1 Body Final Installation

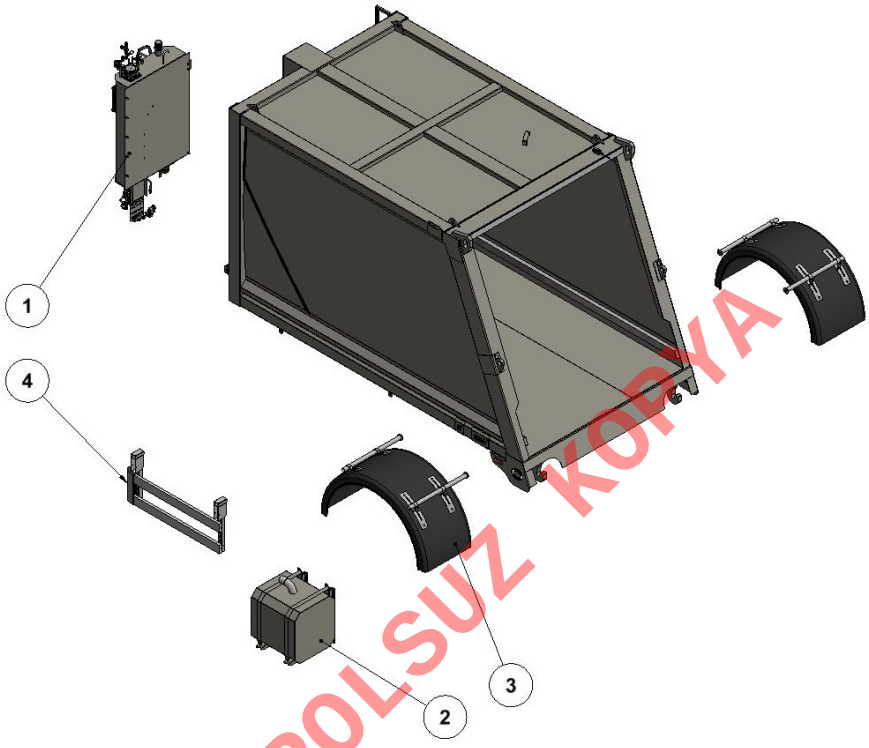

Image 46: Final Assembly Representation of the Body

KONTROLSUZ KOPYA

Ref	Part Code	Explanation	Opt	Pcs
1	ORVALLYTGSAA002	ORV 300 Series and (412-413-414-415) Oil Tank 160 lt // Standard // Automatic System	O	1
	ORVALLYTGSAA003	ORV 300 Series and (412-413-414-415) Oil Tank 160 lt // Standard // Manuel-Semi- Automatic System		
	ORVALLYTGSAA004	ORV 300 Series and (412-413-414-415) Oil Tank 160 lt // Tandem // Automatic System		
	ORV200YTGSAA001	ORV 200 Oil Tank 120 lt // Standard // Automatic System		
	ORV200YTGSAA002	ORV 200 Oil Tank 120 lt // Tandem // Automatic System		
	ORV200YTGSAA005	ORV 200 Oil Tank 120 lt // Standard // Manuel-Semi-Auto. System		
	ORV400YTGSAA001	ORV 400 Oil Tank 200 lt // Standard // Automatic System (16m³-24m³)		
	ORV400YTGSAA003	ORV 400 Oil Tank 200 lt // Standard // Manuel-Semi-Aut. System (16m³-24m³)		
	ORV400YTGSAA004	ORV 400 Oil Tank 200 lt // Tandem // Aut. System		
2	ORV200PSGSAA001	ORV 200 Series Small Waste Water Tank 80lt	O	1
	ORVALLPSGSAA002	ORV 300 – 400 Series Large Waste Water Tank 189 lt		

3	110300030001	ORV 300 - 400 Series Large Size Mudguard Set	O	1
	110300030003	ORV 200 Series Small Size Mudguard Set		
4	TMOALLKRMRAA001	ORV 400 Bicycle Stand Installation Set	O	1
	TMOALLKRMRAA002	ORV 300 Bicycle Stand Installation Set		
	TMOALLKRMRAA003	ORV 200 Bicycle Stand Installation Set		

Table 10: Illustration of Tailgate Final Installation

6.1.2 Tailgate Final Installation

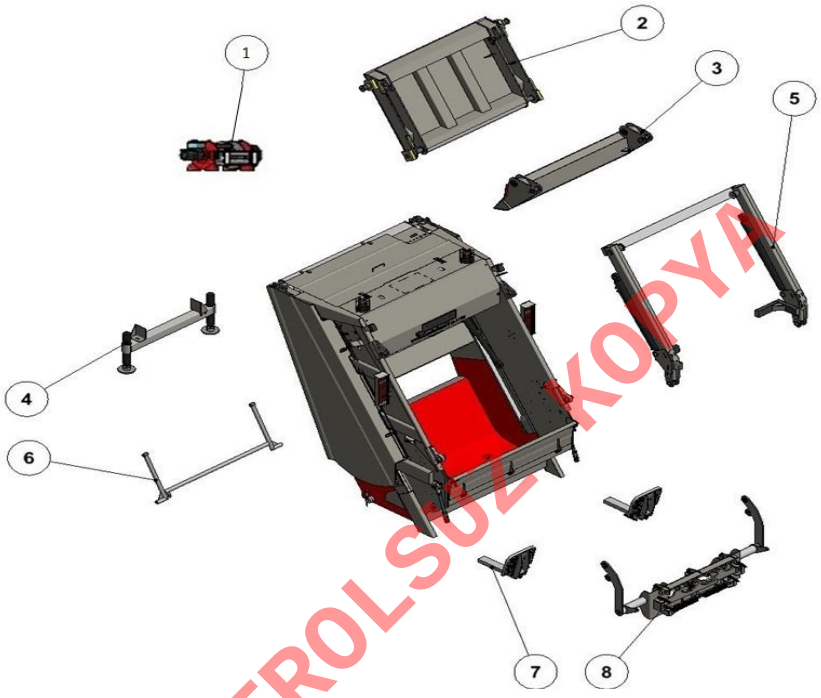

Image 43: Final Assembly Representation of the Tailgate

KONTROLSÜZ KOPYA

Ref	Part Code	Explanation	Opt.	Pcs
1	051001070001	HMW 4.0 PHT Vinch	O	1
2	ORV200BCGSAA001	ORV 200 Packer Blade Installation	S	1
	ORV300BCGSAA001	ORV 300 Packer Blade Installation		
	ORV400BCGSAA001	ORV 400 Packer Blade Installation		
3	ORV200KZGSAA001	ORV 200 Slider Installation	S	1
	ORV300KZGSAA001	ORV 300 Slider Installation		
	ORV400KZGSAA001	ORV400 Slider Installation		
4	ORV400SGGSAA001	ORV Skiploader Stabilizer Installation	O	1
5	ORV400SKGSAA001	ORV 400 Series Skiploader Arm Installation	O	1
6	ORV200DYGSAA001	ORV 200 Tailgate Support Rod Installation	S	1
	ORV300DYGSAA001	ORV 300 Tailgate Support Rod Installation		
	ORV400DYGSAA001	ORV 400 Tailgate Support Rod Installation		
7	TMOALLBSGRAA001	Step Installation	O	1
8	ORV400APSSAA001	ORV 400 120lt-240lt / 400lt-700lt Bin Lifter (tr) (A1)	O	1
	ORV400APSSAA002	ORV 400 Series 120lt-1100lt Bin Lifter (eu) (A2)		
	ORV300APSSAA001	ORV 300 120lt-240lt / 400lt-700lt Bin Lifter (tr) (A1)		

	ORV300APSSAA002	ORV 300 Series 120lt-1100lt Bin Lifter (eu) (A2)		
	ORV200APSSAA001	ORV 200 120lt-240lt / 400lt-700lt Bin Lifter (tr) (A1)		
	ORV200APSSAA002	ORV 200 Series 120lt-1100lt Bin Lifter (eu) (A2)		

Table 11: Illustration of Tailgate Final Installation

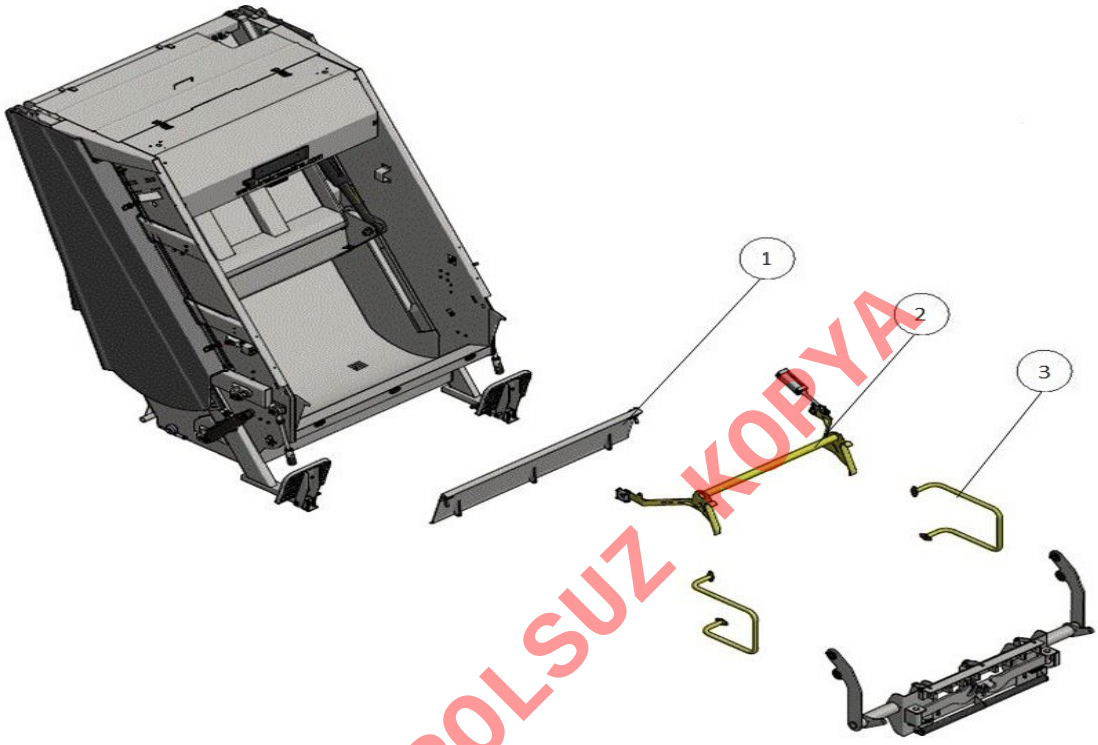

KONTROLSUZ KOPYA

Image 48: Final Assembly Representation of the Tailgate

Ref	Part Code	Explanation	Opcional	Pieces
1	ORV200AKMSAA007	ORV 200 Tailgate Extension Installation	O	1
	ORV300AKMSAA007	ORV 300 Tailgate Extension Installation		
	ORV400AKMSAA025	ORV 400 Tailgate Extension Installation		
2	ORV200KAGSAA001	ORV 200 Container Lid Opening A2 // Pneumatic	O	1
	ORV300KAGSAA001	ORV 300 Container Lid Opening A2 // Pneumatic		
	ORV400KAGSAA002	ORV 400 Container Lid Opening A2 // Pneumatic		
	ORV200KDGSAA001	ORV 200 Container Support A2 // Pneumatic		
	ORV300KDGSAA001	ORV 300 Container Support A2 // Pneumatic		
	ORV400KDGSAA001	ORV 400 Container Support A2 // Pneumatic		
3	ORVALLKRGSAA001	Safety Bar Installation (Left)	O	1
	ORVALLKRGSAA002	Safety Bar Installation (Right)		

Table 12: Tailgate Last Installation Elements

6.1.3 Body Installation

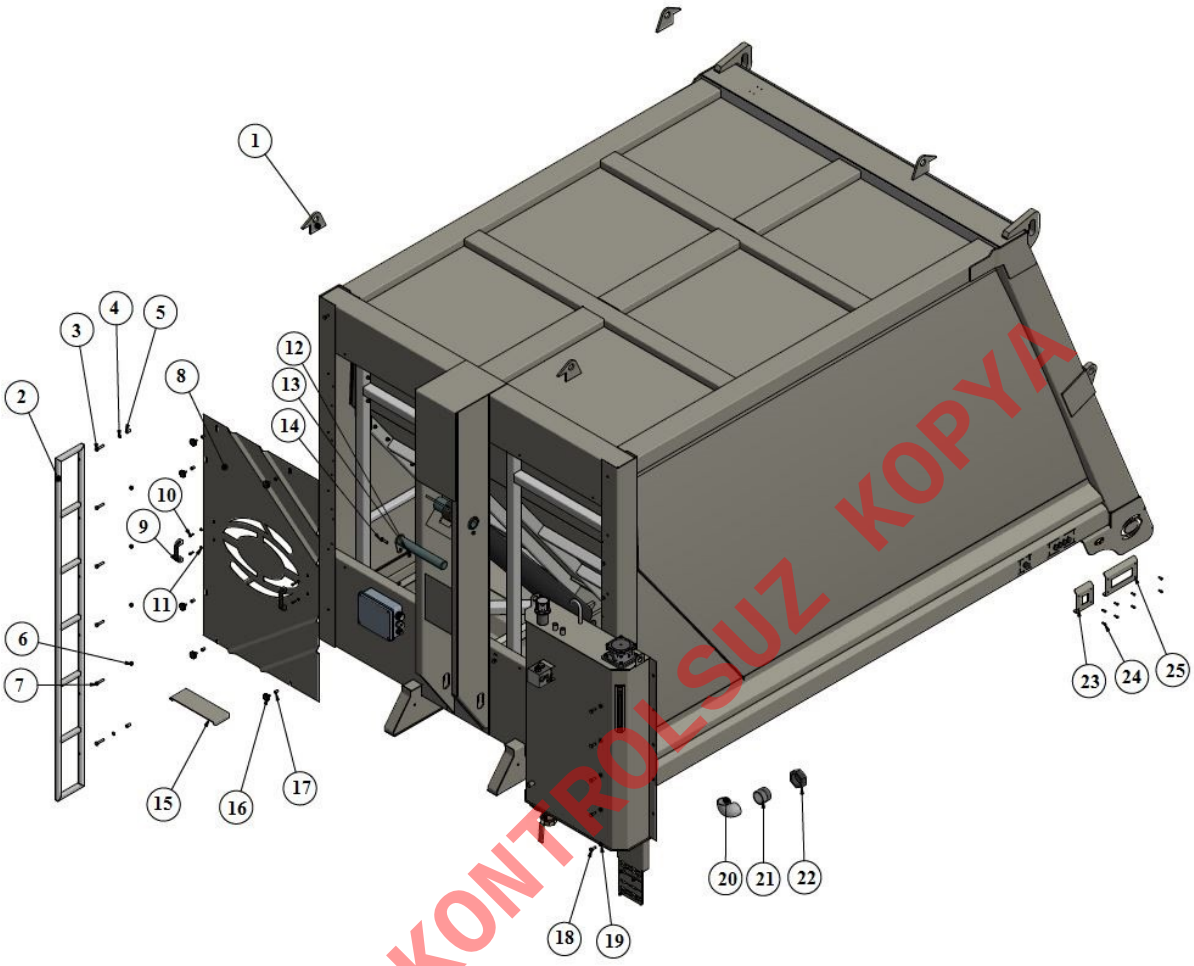

KONTROLSUZ KOPYA

Image 44:Assembly of Body

Ref	Part Code	Explanation	Op	Pcs
1	ORVALLVUPSAA011	ORV 200 – 300-400 Body&Slider&Blade Carriage Lug	S	4
	ORVALLKSPSAA004	ORV 400 Rectangular Body Carriage Lug		
2	ORV200MRGSAA001	ORV-200 Series Body Ladder	O	4
	ORV300MRGSAA001	ORV-300 Series Body Ladder Installation		
	ORV400MRGSAA001	ORV-400 Series Ladder Installation		
3	100100070024	Bolts / M10X50 mm	O	2
4	101100710002	Washers / Spring Washers / M10	O	6

5	100200480001	Nuts / Rivet Nut M10	S	2
6	100200400009	Nuts /Fibered/ M10	O	4
7	100100070024	Bolts / M10X50 mm	O	4
8	TMOALLKSMSAA001	ORV- 200 Series Front Repair Cover	S	1
	ORV300KSMSAA004	ORV- 200 Series Front Repair Cover	S	1
	ORV400KSMSAA008	ORV- 400 Series Front Repair Cover	S	1
9	101400920001	Pipes and Handles/ Plastic Handles / 123mm Plastic Black Handle	S	2
10	100100080002	Bolts / Imbus Full Paso / M6x20 mm	S	4
11	100200400001	Nuts / Galvanized / Fibered / M6	S	4
12	ORVALLTBTSAA004	ORV 200 - 300 Series Telescopic Cylinder Shaft	S	1
	ORV400TBTSAA004	ORV 400 Series Telescopic Cylinder Shaft	S	1
13	ORVALLVUPSAA010	KZ&BC&MN&TB&IK&AK Slider Piston Connection// Piston Connection Part/Pear	S	1
14	100100070001	Bolts Hexagon Headed Full Paso / M10x40 mm	S	1
15	TMOALLEEPSAA003	ORV 200-300-400 Front Electrical Panel Protection Plate	S	1
16	100100910001	Bolts / Plastic Headed / M8x18 mm	S	6
17	100200480004	Nuts / Rivet Nut / M8	S	6
18	100100070003	Nuts / M10x30 mm	S	8
19	100200400009	Nuts / Fibered / M10	S	8
20	050100050001	Plumbing Records / Patented Elbows / 2 1/2 "	O	2
21	050100480010	Plumbing Records / Nipple / 2 1/2" External Half Threaded Conical	O	2
22	050400410004	Hydraulics Records / BSP / Blind Plugs / 2 1/2" Internally Threaded	O	1
23	ORVALLEEPSAA018	ORV 200-300-400 Double Handed Button Cover Sheet -1 (Automatic System)	O	1
	ORVALLEEPSAA020	ORV 200-300-400 Double Handed Button Cover Sheet -1 (Manuel-Semi-Automatic System)	O	1
24	100100080001	Bolts Imbus Full Paso / M6x16 mm	S	16
25	ORVALLEEPSAA017	ORV 200-300-400 Double Handed Button Cover Sheet -2 (Automatic System)	O	1
	ORVALLEEPSAA019	ORV 200-300-400 Double Handed Button Cover Sheet -2 (Manuel-Semi-Automatic System)	O	1

KONTROLSÜZ KOPYA

Table 13: Body Connection Elements

6.1.4 Ejecting Panel Installation

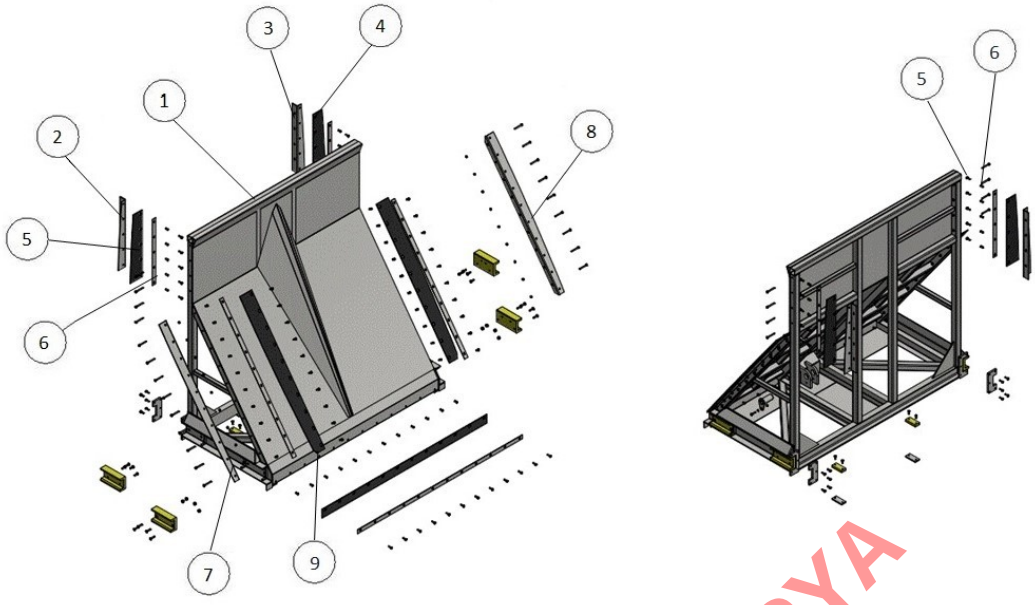

Image 45:Ejecting Panel Assembly Demonstration

KONTROLSÜZ KOPYA

Ref	Part Code	Explanation	Ops	Pcs
1	ORV400IKGSAA001	ORV 400 Series Ejecting Panel General Installation	S	1
	ORV300IKGSAA001	ORV 300 Series Ejecting Panel General Installation		
	ORV200IKGSAA001	ORV 200 Series Ejecting Panel General Installation		
2	ORV400IKPSAA023	ORV 400 Series Upper Rubber Connection Plate(Left)	S	1
	ORV300IKPSAA010	ORV 300 Series Upper Rubber Connection Plate(Left)		
	ORV200IKPSAA010	ORV200 Series Upper Rubber Connection Plate(Left)		
3	ORV400IKPSAA049	ORV 400 Series Upper Rubber Connection Plate(Right)	S	1
	ORV300IKPSAA019	ORV 300 Series Upper Rubber Connection Plate(Right)		
	ORV200IKPSAA023	ORV 200 Series Upper Rubber Connection Plate(Right)		
4	ORV400IKPSAA051	ORV 400 Series Upper Rubber (Right)	S	1
	ORV300IKPSAA032	ORV 300 Series Upper Rubber (Right)		
	ORV200IKPSAA025	ORV 200 Series Upper Rubber (Right)		
5	ORV400IKPSAA043	ORV 400 Series Upper Rubber (Left)	S	1
	ORV300IKPSAA030	ORV 300 Series Upper Rubber (Left)		
	ORV200IKPSAA018	ORV 200 Series Upper Rubber (Left)		
6	ORV400IKPSAA029	ORV 400 Series Top Rubber Tightening Plate	S	2
	ORV300IKPSAA012	ORV 300 Series Top Rubber Tightening Plate		
	ORV200IKPSAA013	ORV 200 Series Top Rubber Tightening Plate		
7	ORV400IKPSAA024	ORV 400 Series Lower Rubber Tightening Plate(Left)	S	1
	ORV300IKPSAA013	ORV 300 Series Lower Rubber Tightening Plate(Left)		
	ORV200IKPSAA014	ORV 200 Series Lower Rubber Tightening Plate(Left)		
8	ORV400IKPSAA050	ORV 400 Series Lower Rubber Tightening Plate(Right)	S	1
	ORV300IKPSAA013	ORV Series Lower Rubber Tightening Plate (Right)		
	ORV200IKPSAA014	ORV 200 Series Lower Rubber Tightening Plate(Right)		
9	ORV400IKPSAA044	ORV 400 Series Lower Rubber(Right)	S	1
	ORV300IKPSAA031	ORV 300 Series Lower Rubber (Right)		
	ORV200IKPSAA019	ORV 200 Series Lower Rubber)		

Table 14: Ejecting Panel Connection Elements

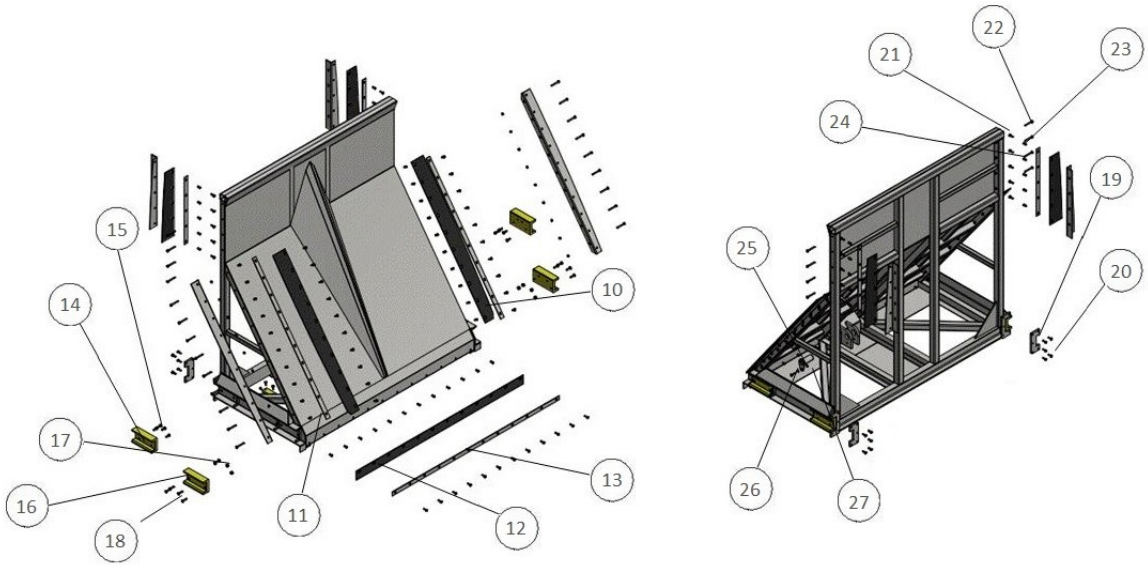

Image 46: Assembly of Ejector Plate

KONTROLSÜZ KOPYA

Ref	Part Code	Explanation	Opc	Pieces
10	ORV200IKPSAA019	ORV 200 Series Lower Rubber (Right)	S	1
	ORV300IKPSAA031	ORV 300 Series Lower Rubber (Right)		
	ORV400IKPSAA044	ORV 400 Series Lower Rubber (Right)		
	ORV200IKPSAA026	ORV 200 Series Lower Rubber (Left)		
	ORV300IKPSAA033	ORV 300 Series Lower Rubber (Left)		
	ORV400IKPSAA052	ORV 400 Series Lower Rubber (Left)		
11	ORV200IKPSAA014	ORV 200 Series Lower Rubber Tightening Panel	S	1
	ORV300IKPSAA013	ORV 300 Series Lower Rubber Tightening Panel		
	ORV400IKPSAA030	ORV 400 Series Lower Rubber Tightening Panel		
12	ORV200IKPSAA039	ORV 200 Series Bottom Rubber	S	1
	ORV300IKPSAA034	ORV 300 Series Bottom Rubber		
	ORV400IKPSAA060	ORV 400 Series Bottom Rubber		
13	ORV200IKPSAA036	ORV 200 Series Bottom Rubber	S	1
	ORV300IKPSAA028	ORV 300 Series Bottom Rubber Tightening Panel		
	ORV400IKPSAA058	ORV 400 Series Bottom Rubber Tightening Panel		
14	ORVALLIKTSAA003	Ejector Plate Rear Castermid Wedge	S	2
15	100100070090	Bolts /M12x30mm	S	8
16	ORVALLIKTSAA002	Ejector Plate Front Castermid Wedge	S	2
17	100200360002	Nuts / Hexagon/ M12	S	8
18	100100270004	Bolts /M12x45mm	S	8
19	ORVALLIKPSAA017	Ejecting Panel Rear Castermid Cover Sheet	S	2
20	100100070003	Bolts /M10x30mm	S	10
21	100100070003	Bolts /M10x30mm	S	30
22	100100070028	Bolts /M10x80mm	S	26
23	100200360003	Nuts / Hexagon / M10	S	26
24	100200480001	Nuts / Revit Nuts / M10	S	42
25	ORV200IKMSAA004	ORV 200 Ejecting Panel Piston Connection Shaft Installation	S	1
	ORV300IKMSAA004	ORV 300 Ejecting Panel Piston Connection Shaft Installation		
	ORV400IKMSAA007	ORV 400 Ejecting Panel Piston Connection Shaft Installation		
26	100100190031	Bolts /M10X40mm	S	1
27	100200340009	Nuts / M10	S	1

Table 15: Ejecting Panel Connection Elements Table-2

6.1.5 Oil Tank Installation

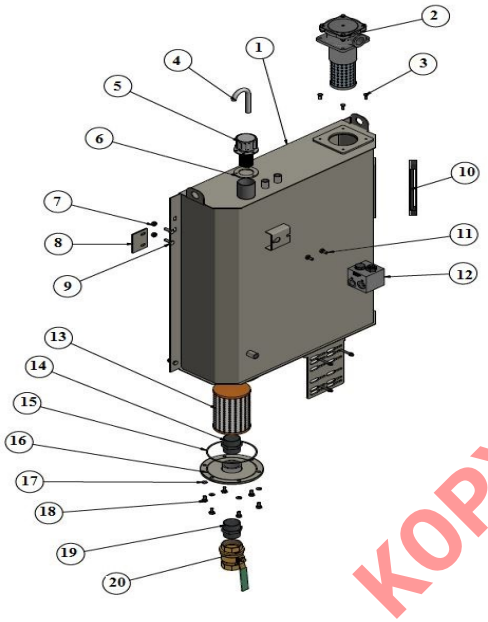

Image 47:Assembly of Oil Tank

KONTROLSUZ KOPYA

Ref	Part Code	Explanation	Ops	Pcs
1	ORVALLYTGSAA002	ORV 300 Series and (412-413-414-415) Oil Tank 160 lt // Standard // Automatic System	O	1
	ORVALLYTGSAA003	ORV 300 Series and (412-413-414-415) Oil Tank 160 lt // Standard // Manuel-Semi-Automatic System		
	ORV200YTGSAA001	ORV 200 Oil Tank 120 lt // Standard // Automatic System		
	ORV200YTGSAA005	ORV 200 Oil Tank 120 lt // Standard // Manuel-Semi-Automatic System	O	1
	ORV400YTGSAA001	ORV 400 Oil Tank 200 lt // Standard // Automatic System (16m³-24m³)	O	1
	ORV400YTGSAA003	ORV 400 Oil Tank 200 lt // Standard // Manuel-Semi Automatic System. (16m³-24m³)	O	1
2	050200070003	Hydraulic Filters / Return Filters	S	1
3	100100070007	Bolts / M8x20 mm	S	4
4	TMOALLYTPSAA002	ORV Oil Tank Air Discharge Pipe	S	1
5	100700540009	Lid Lock Accessories / Tank Lids / Chained and Screwed Tank Cap	S	1
6	TMOALLYTPSAA006	ORV Oil Tank Charge Lid Installation Sheet	S	1
7	100200400009	Nuts / 8 Quality / Galvanize Covered / Fibered / M10	S	1
8	ORVALLYTPSAA008	ORV Oil Tank Installation Sheet	S	1
9	100100070003	Bolts / M10x30 mm	S	1
10	050500160001	Gauges / Oil Level Gauges / 254 mm Level	S	4
11	100100070004	Bolts / M10x20 mm	S	4
12	050800650002	Blocks / Discharged Block (Poppet)	S	1
13	050200060007	Hydraulic Filter / Suction Filter (ORV 300-ORV400)	O	1
	050200060001	180 lt/min Hydraulic Filters / Suction Filter (ORV 200)	O	1
14	050100480006	Plumbing Records /Galvanize / Nipple / 2"	O	1
15	100600530008	O- Rings	O	1
16	100500510010 TMOALLYTPSAA004	Muffs / Black / Full / 2" Oil Tank Flange	O	1
17	101100710002	Stamps and Washers / Spring Washers / M10	S	6
18	100100070004	Bolts /M10x20mm	S	6
19	050100480006	Plumbing Records /Galvanize / Nipple / 2"	O	1
20	101000620011	Ball Valves / Threaded 2 Parted / PN10 / 2" DN25	O	1

Table 16: Oil Tank Connection Elements Table

KONTROLSUZ KOPYA

6.1.6 Tandem Oil Tank Installation

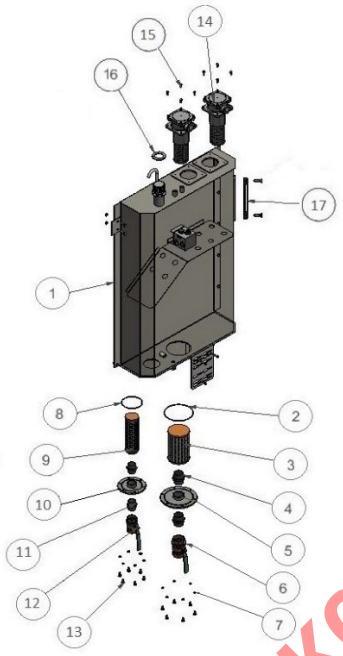

Image 48: Assembly of Tandem Oil Tank

KONTROLSÜZ KOPYA

Ref	Part Code	Explanation	Op	Ad
1	ORV200YTGSAA002	ORV 200 Oil Tank 120 lt // Tandem // Automatic System	S	1
	ORVALLYTGSAA004	ORV 300 Series and (412-413-414-415) Oil Tank 160 lt // Tandem // Automatic System		
	ORV400YTGSAA004	ORV 400 Oil Tank 200 lt // Tandem // Automatic System		
2	100600530008	O- Rings (ORV 200-300-400)	S	1
3	050200060007	Hydraulic Filters / Suction Filter (ORV 300-ORV400)	S	1
	050200060001	Hydraulic Filters / Suction Filter (ORV 200)		
4	050401010003	Hydraulic Filters / Nipples / 2" (ORV 300-400)	S	2
	050100480003	Plumbing Records / Nipples / 1 1/2" Galvanize (ORV 200)		
5	100500510010 ORVALLYTPSAA011	Muffs / Black / Full / 2" Oil Tank Flange	S	1
6	101000620011	Ball Valves / Threaded 2 Parted / PN10 / 2" DN25	S	1
7	101100710002	Stamps and Washers / Spring Washers / M10	S	12
8	100600530001	O- Rings (ORV 200-300-400)	S	1
9	050200060001	Hydraulic Filter / Suction filters / 1 1/2"	S	1
10	100500510010 TMOALLYTPSAA004	Muffs / Black/ Full / 2" Oil Tank Flange	S	1
11	050100480003	Plumbing Records / Nipple / 1 1/2" Galvanize	S	2
12	101000620002	Ball Valves/ Thread 2 Parted / PN10 / 1 1/2 " DN25 (ORV 200)	S	1
	101000620011	Ball Valves / Thread 2 Parted / PN10 / 2" DN25 (ORV 300-400)		
13	100100070004	Bolts /M10x20mm	S	12
14	050200070003	Hydraulic Filters / Return Filter	S	2

15	100100070007	Bolts / M8x20mm	S	8
16	TMOALLYTPSAA006	Oil Tank Cap Sheet	S	1
17	100100070006	Bolts / M12x40 mm	S	2
18	050500160001	Gauges / 254 mm Level	S	1

Table 17: Tandem Oil Tank Connection Elements Table

6.1.7 Tailgate Installation

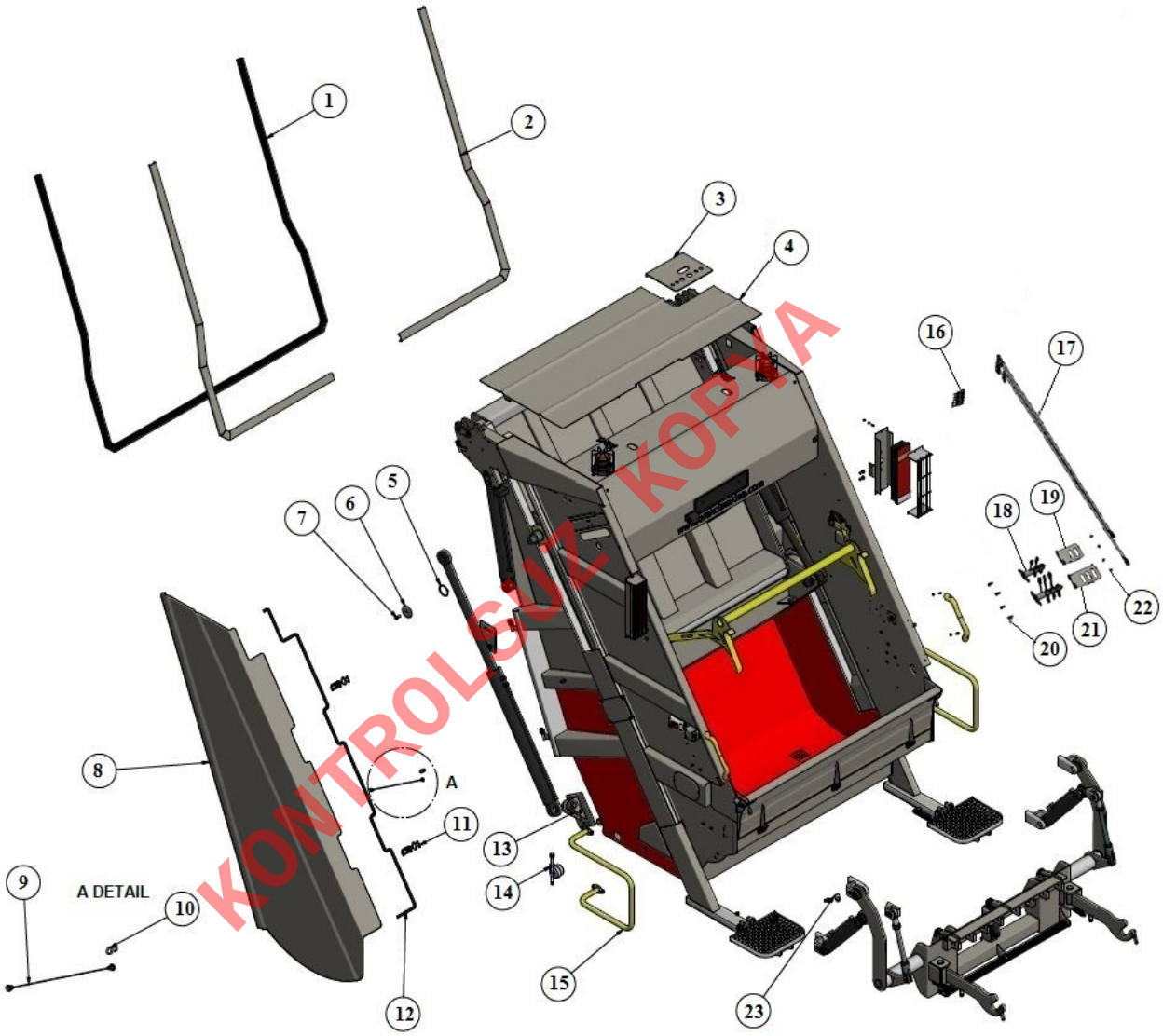

KONTROLSÜZ KOPYA

Image 49: Assembly of Tailgate

Ref	Part Code	Explanation	Op	Ad
1	ORV400AKPSAA072	ORV 400 Series Tailgate Rubber	S	1
	ORV300AKPSAA049	ORV 300 Series Tailgate Rubber	S	1
	ORV200AKPSAA025	ORV 200 Series Tailgate Rubber	S	1
2	ORV400AKPSAA049 ORV400AKPSAA070	ORV 400 Series Tailgate Rubber Connection Sheet	S	1
	ORV300AKPSAA014 ORV300AKPSAA008	ORV 300 Series Tailgate Rubber Connection Sheet	S	1
	ORV200AKPSAA017 ORV200AKPSAA011	ORV 200 Series Tailgate Rubber Connection Sheet	S	1
3	ORV400AKPSAA083	ORV 400 Series Tailgate Hydraulic Transition Sheet	S	1
	ORVALLAKPSAA080	ORV 300 – 200 Series Tailgate Hydraulic Transition Sheet		
4	ORV400AKPSAA097	ORV 400 Series Upper Repair Plate	S	1
	ORV300AKPSAA031	ORV 300 Series Upper Repair Plate		
	ORV200AKPSAA034	ORV 200 Series Upper Repair Plate		
5	100300450020	Piston Rings (ORV 300-ORV 400)	S	2
	100300450003	Piston Rings (ORV 200)		
6	ORVALLKZPSAA005	ORV 400-300-200 Series Slider Stamp	S	2
7	100100070044	Bolts / M14X30 mm	S	2
8	ORV400AKMSAA016	ORV 400 Series Tailgate Side Cover (Right)	S	1
	ORV300AKMSAA005	ORV Series Tailgate Side Cover (Right)		
	ORV200AKMSAA005	ORV 200 Series Tailgate Side Cover (Right)		
	ORV400AKMSAA007	ORV 400 Series Tailgate Side Cover (Left)		
	ORV300AKMSAA004	ORV 300 Series Tailgate Side Cover (Left)		
	ORV200AKMSAA004	ORV 200 Series Tailgate Side Cover (Left)		
9	ORVALLAKPSAA076	ORV 400-300-200 Series Tailgate Side Cover Steel Rope	S	2
10	103801790003	Safety Equipments/ Hooks / S Hook 5 mm	S	4
11	100701010001	Cover Lock Accessories / Latches / 2 Piece Hood Latch Lock	S	4
12	ORV400AKPSAA071	ORV 400 Series Tailgate Side Cover Rubber	S	1
	ORV300AKPSAA050	ORV 300 Series Tailgate Side Cover Rubber		
	ORV200AKPSAA030	ORV 200 Series Tailgate Side Cover Rubber		
13	ORV400AKMSAA017	ORV 400 Series Slider Connection Map	S	2
	ORV300AKMSAA010	ORV 300 Series Slider Connection Map		
	ORV200AKMSAA016	ORV 200 Series Slider Connection Map		
14	100701000001	Cover Lock Accessories/ Chain Blind Plug/Waste Water Drain Plug	S	2
15	ORVALLKRGSAA001	ORV 200-300-400 Series Side Bars (Left)	O	1
	ORVALLKRGSAA002	ORV 200-300-400 Series Side Bars (Right)		
16	ORVALLHDPSAA003	ORV 200-300-400 Series Control Lever Extension	S	1
17	ORV400HDPSAA004	ORV 400 Series Control Lever Mechanism	O	1
	ORV300HDPSAA005	ORV 300 Series Control Lever Mechanism		
	ORV200HDPSAA006	ORV 200 Series Control Lever Mechanism		
18	ORVALLAKMSAA007	ORV 200-300-400 Series Double Control Lever	O	1
	ORVALLAKMSAA002	ORV 200-300-400 Series Triple Control Lever		
19	ORVALLAKPSAA071	ORV 200-300-400 Series Double Control Lever Sheet	O	1
20	100100070004	Bolts / M10x20 mm	S	2

KONTROLSÜZ KOPYA

21	ORVALLAKPSAA020	ORV 200-300-400 Series Triple Control Lever Sheet	O	1
22	100200720001	Nuts / M10	S	2
23	ORVALLVUPSAA004	ORV 200-300-400 Series Bin Lifter Sensor Sheet	S	1

Table 18: Tailgate Connection Elements Table

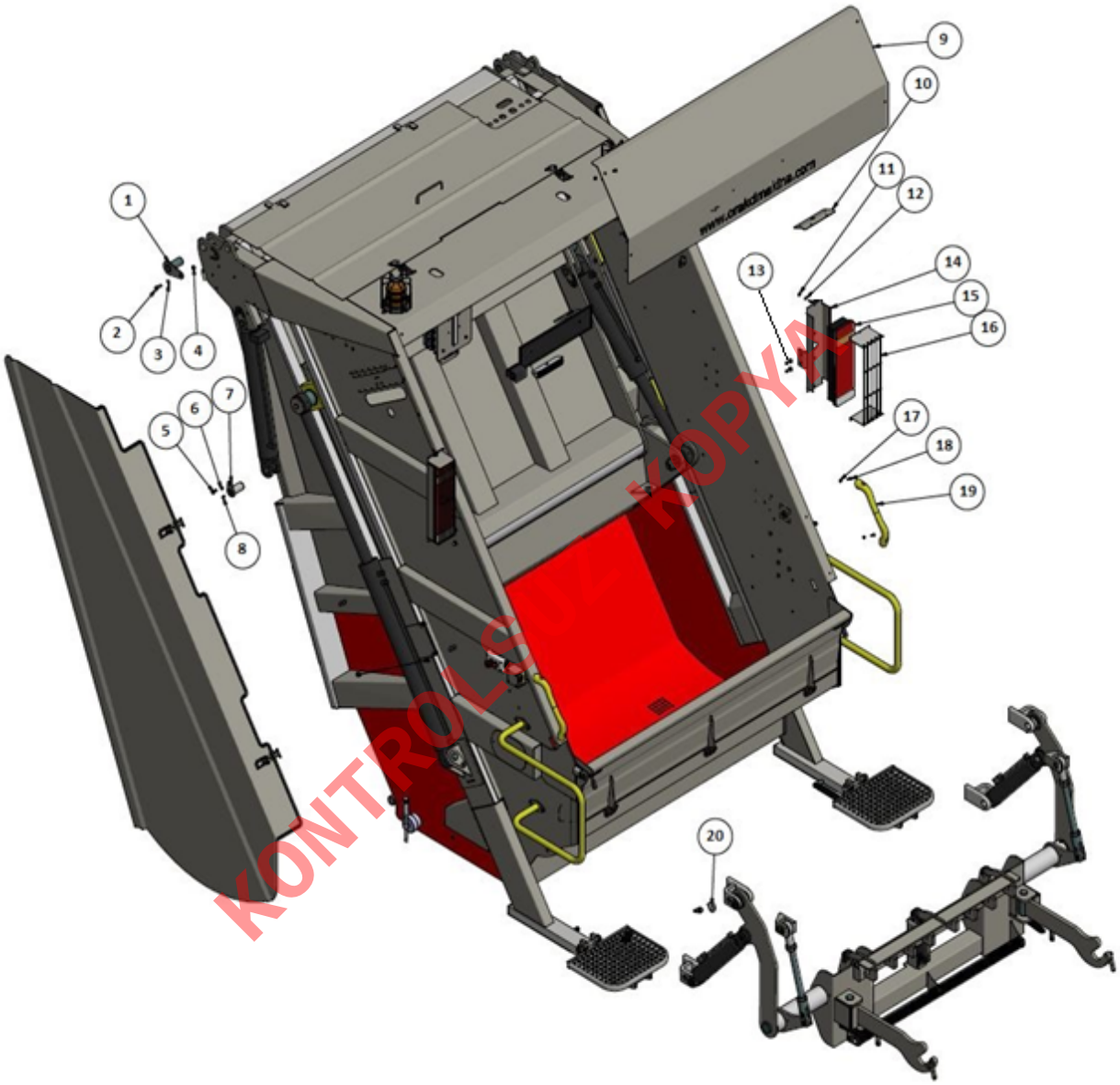

Image 50: Assembly of Tailgate

Ref	Part Code	Explanation	Op	Pcs
1	ORV200MNMSAA005	ORV 200 Series Hinge Pear Connection Installation	S	2
	ORVALLMNMSAA005	ORV 300-400 Series Hinge Pear Connection Installation	S	
2	100100190027	Bolts / M10X30 mm	S	2
3	101100710002	Stamps and Washers / Spring Washers / M10	S	2
4	100200360003	Nuts / M10	S	2
5	100100190033	Bolts / M10X20 mm	S	2
6	101100710002	Stamps and Washers / Spring Washers / M10	S	2
7	ORVALLVUMSAA001	AK&AP Piston Connection Shaft Installation	S	2
8	100400470001	Grease Points / H1 Flat Type / M6	S	2
9	ORV200AKPSAA013	ORV 200 Series Tailgate Advertisement Sheet	S	1
	ORV300AKPSAA010	ORV 300 Series Tailgate Advertisement Sheet		
	ORV400AKPSAA041	ORV 400 Series Tailgate Advertisement Sheet		
10	ORVALLEEPSAA021	ORV 200-300-400 Series Lightning Lamp Sheet	S	1
11	100200390005	Nuts / Fiber / M6	S	4
12	100100080001	Bolts / M6x16 mm	S	4
13	100100070003	Bolts / M10x30 mm	S	
14	ORVALLEEPSAA027	ORV 300-400 Series Stop Lamp Sheet	S	2
	ORV200EEPSAA002	ORV 200 Series Stop Lamp Sheet		
	ORVALLEEPSAA024	ORV 200-300-400 Series Stop Lamp Connection Sheet		
15	031100110055	Lamp and Headlight Group / Stop Lamp 4 Pieces	S	2
16	ORVALLEEPSAA028	ORV 300-400 Series Stop Lamp Protection Sheet	S	2
	ORV200EEPSAA003	ORV 200 Series Stop Lamp Protection Sheet		
17	100100080001	Bolts / M6X25 mm	S	4
18	100200390005	Nuts / M6	S	4
19	101400920003	Pipes and Handles / Yellow Handle	S	2
20	ORVALLVUPSAA004	AP&AK Sensor Sheet	O	1

KONTROLSÜZ KOPYA

Table 19: Tailgate Connection Elements Table -2

6.1.8 Packer Blade Installation

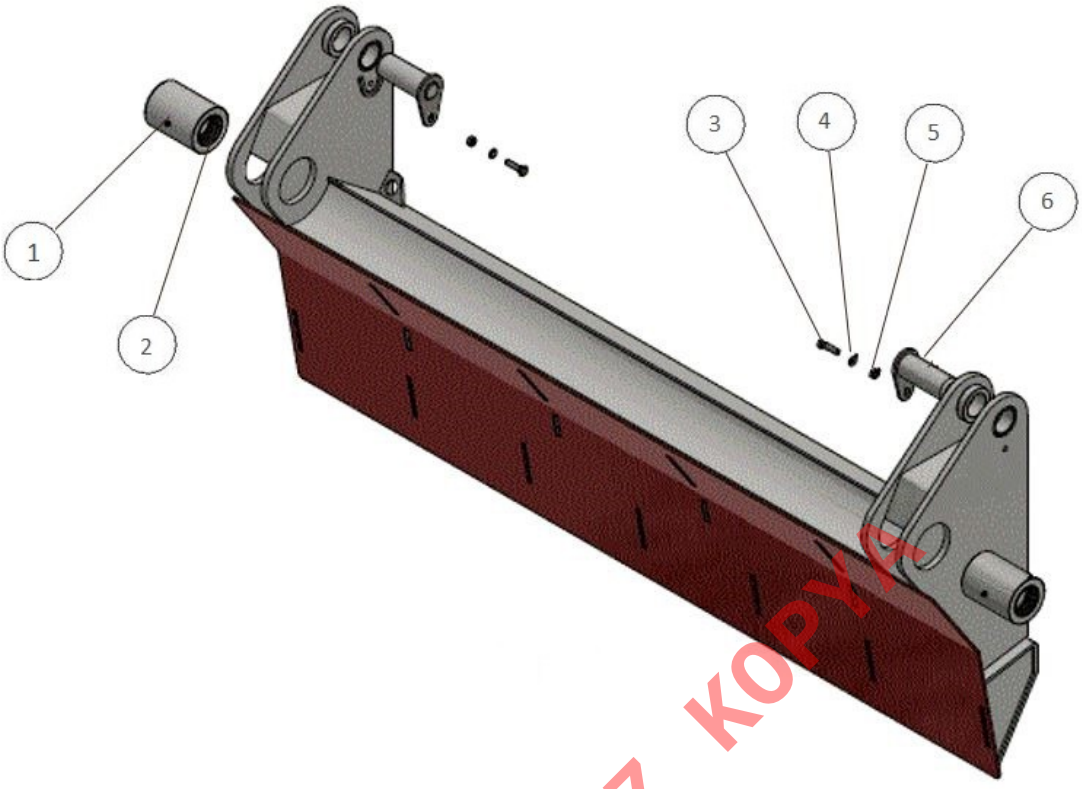

Image 51: Assembly of Blade

KONTROLSUZ KOPYA

Ref	Part Code	Explanation	Opsiyonel	Panel
1	100400470001	Grease Points / M6	S	2
2	100800560008	Bronze Bush	S	4
3	100100190031	Bolts /M10x40mm	S	2
4	101100710002	Stamps and Washers / Thread Washers / M10	S	2
5	100200370006	Nuts / M10	S	2
6	ORV200BCMSAA003	ORV 200 Series Blade Piston Pear Connection	S	2
	ORVALLBCMSAA001	ORV 300-400 Series Blade Piston Pear Connection		

Table 20: Blade Connection Elements Table

6.1.9 Slide Installation

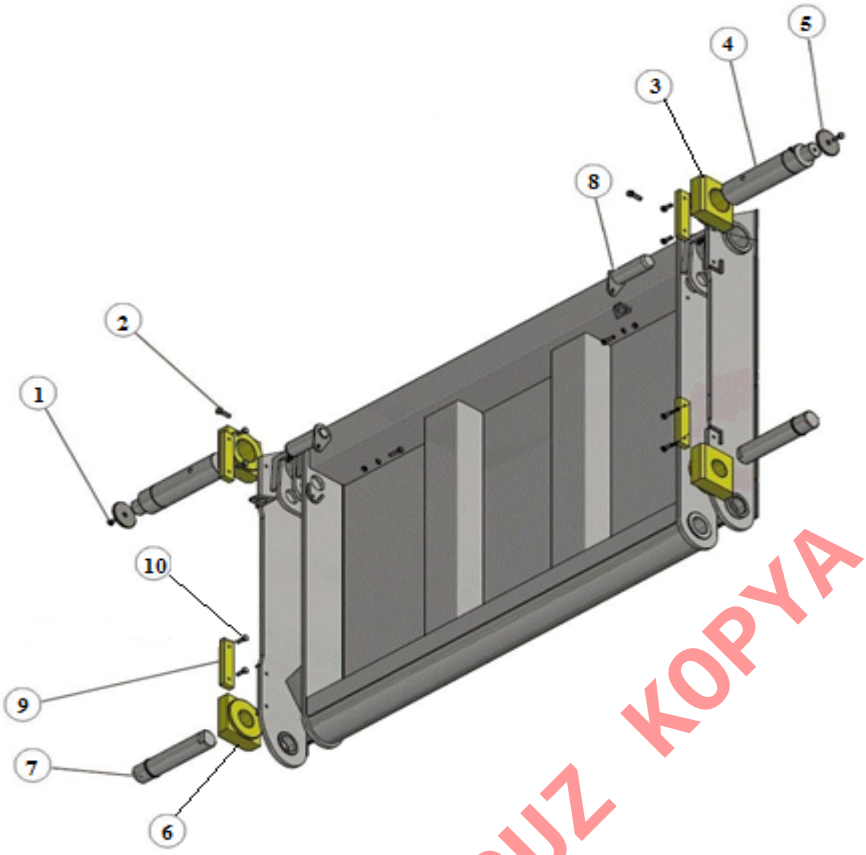

Image 52: Assembly of Slide

KONTROLSUZ KOPYA

Ref	Part Code	Explanation	Opsiyonel	Piece
1	100100070044	Bolts / M14X30 mm	S	2
2	100100130034	Bolts / M12x40mm (ORV 300-400)	S	2
	100100130038	Bolts / M12X35 mm (ORV 200)		
3	ORV400KZTSAA009	ORV 400 Slide Castermid Upper	S	4
	ORV300KZTSAA001	ORV 300 Slide Castermid Upper		
	ORV200KZTSAA005	ORV 200 Slide Castermid Upper		
4	ORV200KZTSAA009	Slide Piston Shaft (ORV 200)	S	2
	ORVALLKZTSAA009	Slide Piston Shaft (ORV 300- 400)		
5	ORVALLKZPSAA005	Slider Connection Stamp	S	2
6	ORV400KZTSAA008	ORV 400 Slide Castermid Bottom	S	2
	ORV300KZTSAA002	ORV 300 Slide Castermid Bottom		
	ORV200KZTSAA005	ORV 200 Slide Castermid Bottom		
7	ORV200KZTSAA008	ORV 200 Slide Bottom Connection Shaft	S	2
	ORVALLKZTSAA008	ORV Slide Bottom Connection Shaft		
8	ORVALLKZMSAA003	Side Connection Shaft	S	2
9	ORVALLKZTSAA002	Slide Side Castermid	S	4
10	100100070003	Bolts / M10x30 mm	S	8

Table 21: Slide Connection Elements Table

6.1.10 Tailgate Support Installation

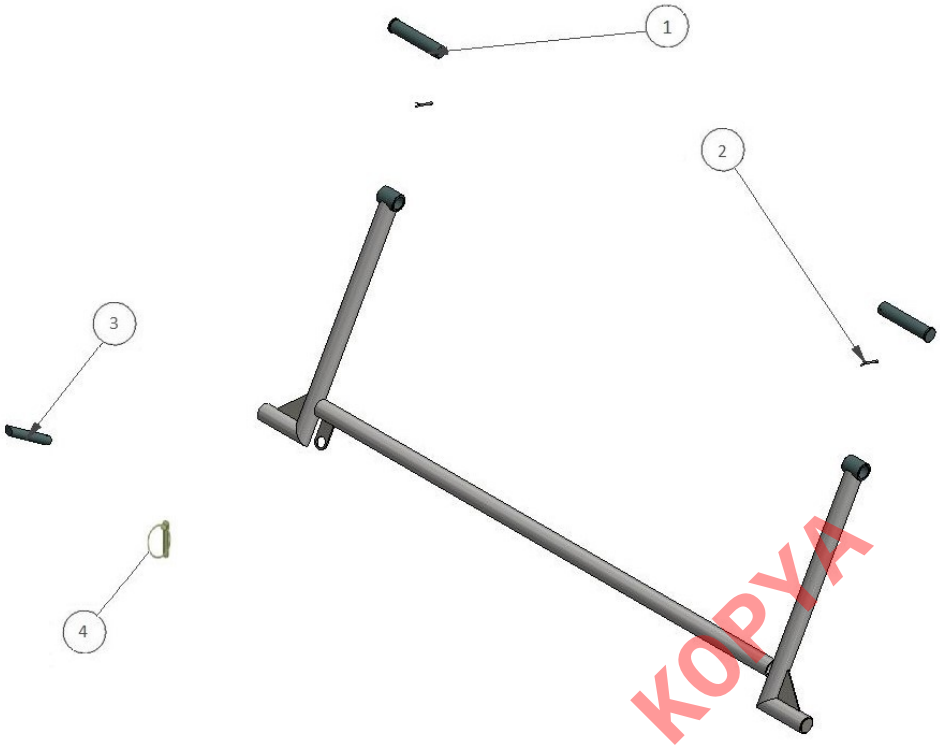

Image 53:Tailgate Support Assembly

KONTROLSUZ KOPYA

Ref	Part Code	Explanation	Ops	Pcs
1	ORV400AKTSAA005	ORV 400 Series Support Shaft	S	2
	ORVALLAKTSAA005	ORV 300-200 Series Support Shaft		
2	100900590001	Cotterpin / Wedge Shaped	S	2
3	ORV200AKTSAA003	ORV 200 Support Lock Piece	S	1
	ORV300AKTSAA001	ORV 300 Support Lock Piece		
	ORV400AKTSAA003	ORV 400 Support Lock Piece		
4	101301810002	Pins / Spring Pins / 10 mm Spring Pin	S	1

Table 22: Tailgate Support Connection Parts Table

6.1.11 Footboard Installation

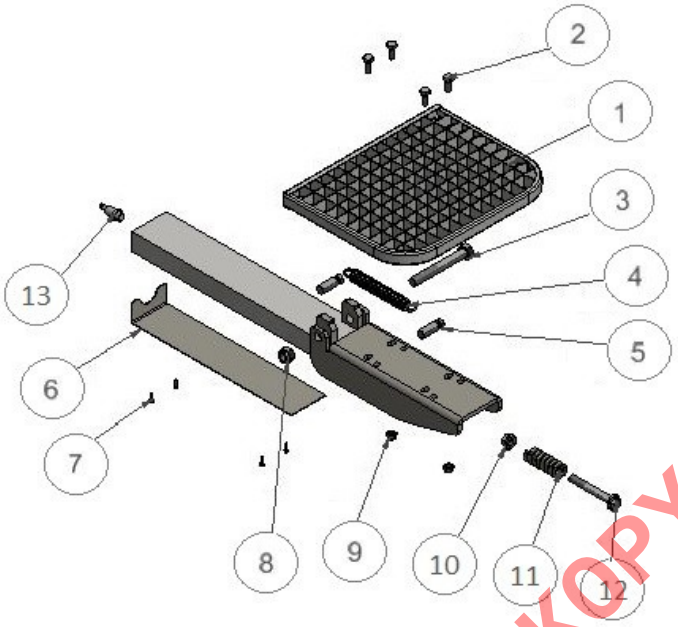

Image 54: Assembly of Step

KONTROLSUZ KOPYA

Ref	Part Code	Explanation	Op	Pcs
1	106202050001	Big Footboard	O	1
	106202050002	Small Footboard		
2	100100070090	Bolts /M12x30mm	O	4
3	100100100004	Bolts /M20x150mm	O	1
4	101800900001	Springs / Pulling Spring	O	2
5	TMOALLVUTSAA001	Spring Pins	O	2
6	TMOALLBSPSAA008	Footboard Profile Cover Sheet	O	1
7	100102090001	Bolts / Smart Screws / Trapezoidal Screws / 4.8x19mm	O	4
8	100200400005	Nuts / M20	O	1
9	100200400006	Nuts / M12	O	4
10	100200400010	Nuts / M16	O	1
11	101800890002	Springs / Press Spring	O	1
12	100100320006	Bolts / M16x120mm	O	1
13	031200120001	Proximity Sensor	O	1

Table 23: Footboard Connection Elements Table

6.1.12 Bin Lifter (A2 / Europe Type) Installation

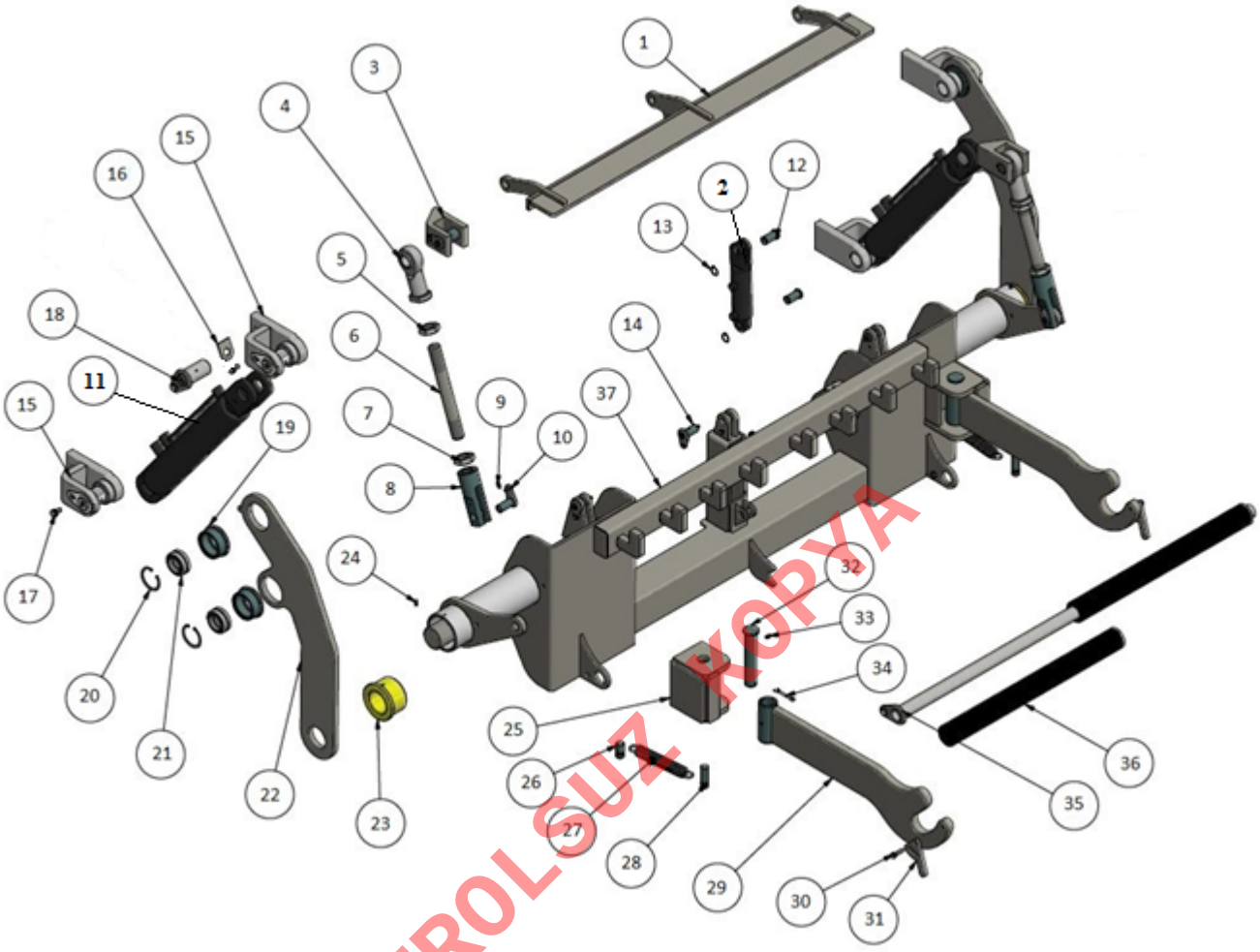

KONTROLSÜZ KOPYA

Image 55: Bin Lifter (A2 / Europe Type) Installation

Ref	Part Code	Explanation	Ops	Pcs
1	TMOALLAPMSAA008	ORV 200-300-400 Series Compaction Mechanism Sheet Installation	S	1
2	TMOALLHDPSAA002	ORV 200-300-400 Bin Lifter Locking Piston	S	1
3	TMOALLAPMSAA002	ORV 200-300-400 Series Lever Arm Connection Joint	S	2
4	102101040001	Joints / Spherical Joints	S	2
5	100200360007	Nuts / M30x2 mm LHT	S	2
6	ORV400APTSAA018	ORV 400 Series Bin lifter Lever Shaft	S	2
	ORV300APTSAA001	ORV 300 Series Bin lifter Lever Shaft		
	ORV200APTSAA001	ORV 200 Series Bin lifter Lever Shaft		
7	100200360008	Nuts / M30x2 mm RHT	S	2
8	TMOALLAPTSAA012	ORV 400-300-200 Lever Fork Connection	S	2
9	100100190038	Bolts / M6X16 mm	S	2
10	TMOALLAPMSAA001	ORV 400-300-200 Series Lever Arm Pear Connection	S	2
11	ORVALLHDPSAA021	ORV 200-300-400 Bin Lifter Piston	S	2
12	TMOALLAPMSAA017	ORV 400-300-200 Series Compaction Mechanism Connection Shaft	S	1
13	100300450001	Piston Rings / External Piston Ring	S	1
14	TMOALLAPTSAA010	ORV 400-300-200 Series Locking Piston Connection Shaft	S	1
15	TMOALLAPPMSAA0	ORV 400-300-200 Series Bin Lifter Connection Joint	S	4

	32			
16	ORVALLVUPSAA004	ORV 400-300-200 AP&AK Sensor Sheet	S	1
17	100100070004	Bolts / M10x20 mm	S	4
18	ORVALLVUMSAA001	ORV 400-300-200 Series AP&AK Piston Connection Shaft Installation	S	2
19	TMOALLAPTSAA002	ORV 400-300-200 Bin Lifter Arm Bushing	S	4
20	100300460001	Piston Rings /Internal Piston Rings	S	4
21	101201030001	Bearings/ Spherical Bearings	S	4
22	ORV400APMSAA008	ORV 400 Series Bin Lifter Side Arms (Right)	O	1
	ORV400APMSAA015	ORV 400 Series Bin Lifter Side Arms (Left)		
	ORV300APMSAA002	ORV 300 Series Bin Lifter Side Arms (Right)		
	ORV300APMSAA003	ORV 300 Series Bin Lifter Side Arms (Left)		
	ORV200APMSAA002	ORV 200 Series Bin Lifter Side Arms (Right)		
	ORV200APMSAA003	ORV Series Bin Lifter Side Arms (Left)		
23	TMOALLAPTSAA004	ORV 400-300-200 Series Bin Lifter Castermid	S	4
24	100400470001	Grease Points / M6	S	14
25	TMOALLAPMSAA004	ORV 400-300-200 Series Bin Lifter Arms Installation (Left)	S	1
	TMOALLAPMSAA010	ORV 400-300-200 Series Bin Lifter Arms Installation (Right)		
26	TMOALLVUTSAA002	ORV 400-300-200 Series Footboard Spring Shaft-1	S	2
27	101800900001	Springs / Pull Spring	S	2
28	TMOALLVUTSAA001	ORV 400-300-200 Series Footboard Spring Shaft-2	S	2
29	TMOALLAPMSAA013	ORV 400-300-200 Series Container Lifting Arm(Left) (EN 840)	O	1
	TMOALLAPMSAA014	ORV 400-300-200 Series Container Lifting Arm (Right) (EN 840)		
30	100100070008	Bolts / M8x30 mm	S	2
31	TMOALLAPPSAA034	ORV 400-300-200 Bin Lifter Lifting Arm Metal Sheet	S	2
32	TMOALLAPTSAA007	ORV 400-300-200 Bin Lifter Connection Bush	S	2
33	100400470001	Grease Points / H1 Flat Type / M6	S	14
34	100900590001	Cotter pin /Tong Shaped	S	2
35	ORVALLVUPSAA005	ORV 400-300-200 Series Bin Lifter Support Pipe Pear	S	1
36	TMOALLAPPSAA038	ORV 400-300-200 Series Container Support Rubber	S	2
37	ORV400APSSAA001	ORV 400 120lt-240lt / 400lt-700lt Bin Lifter (tr) (A1)	O	1
	ORV400APSSAA002	ORV 400 Series 120lt-1100lt Bin Lifter (eu) (A2)		
	ORV300APSSAA001	ORV 300 120lt-240lt / 400lt-700lt Bin Lifter (tr) (A1)		
	ORV300APSSAA002	ORV 300 Series 120lt-1100lt Bin Lifter (eu) (A2)		
	ORV200APSSAA001	ORV 200 120lt-240lt / 400lt-700lt Bin Lifter (tr) (A1)		
	ORV200APSSAA002	ORV 200 Series 120lt-1100lt Bin Lifter (eu) (A2)		

KONTROLSÜZ KOPYA

Table 24: Bin Lifter Connection Parts Table

6.1.13 Waste Water Tank Installation

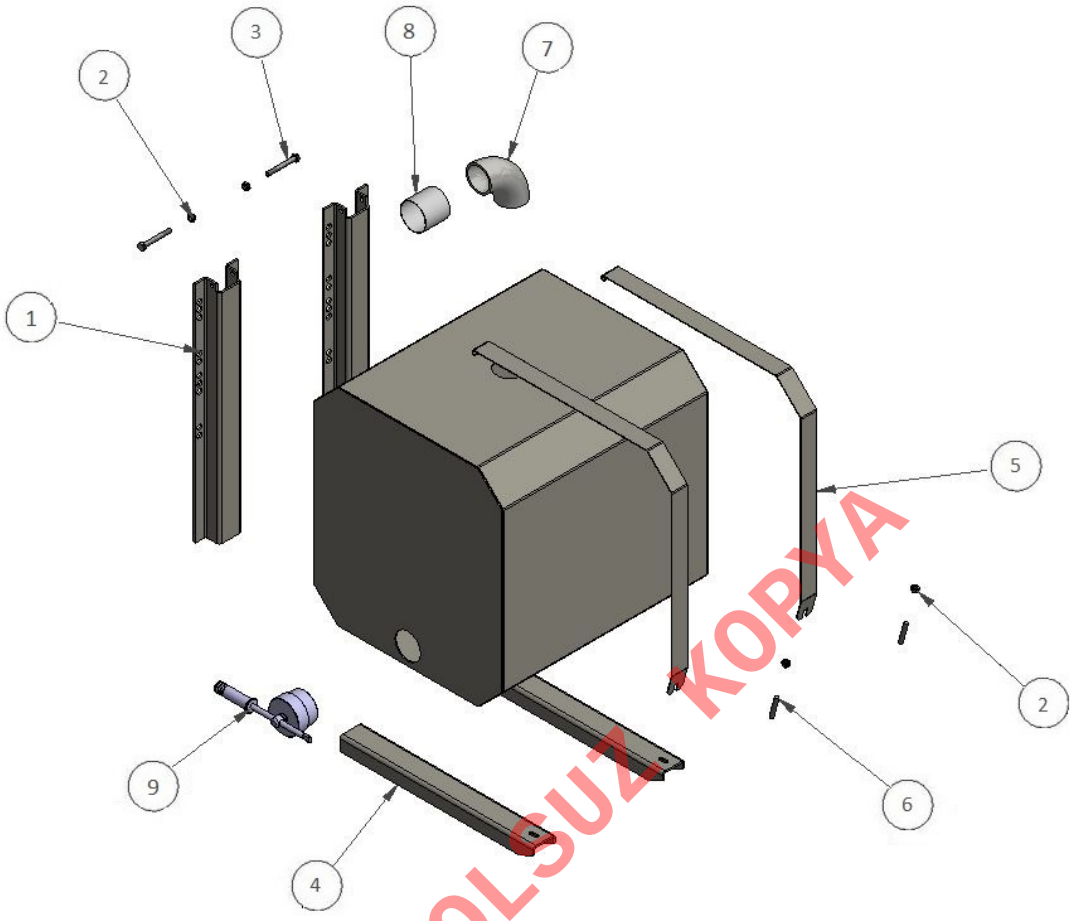

KONTROLSÜZ KOPYA

Image 56: Waste Water Tank Installation

Ref	Part Code	Explanation	Ops	Pcs
1	ORVALLPSPSAA014	Waste Water Tank Connection Metal Sheets (ORV 300-400)	S	2
	ORV200PSPSAA003	Waste Water Tank Connection Metal Sheets (ORV 200)		
2	100200390001	Nuts / M10	S	2
3	100100100017	Bolts/M10x80mm	S	2
4	ORVALLPSPSAA015	Waste Water Tank Connection Metal Sheets (ORV 300-400)	S	2
	ORV200PSPSAA004	Waste Water Tank Connection Metal Sheets (ORV 200)		
5	ORVALLPSMSAA006	Waste Water Tank Connection Belt Connection	S	2
6	ORVALLPSPSAA021	Galvanized / Gijon-Stud / M10	S	2
7	050100050001	Plumbing Records / Tailed Elbows / Patented / 2 1/2 "	S	1
8	ORVALLVUPSAA001	Pipe	S	1
9	100701000001	Waste Water Tank Lid / Lid Locking Accessories/Chain Blind Plug	S	1

Table 25: Waste Water Tank Connection Table

6.1.14 Handle Bar Installation

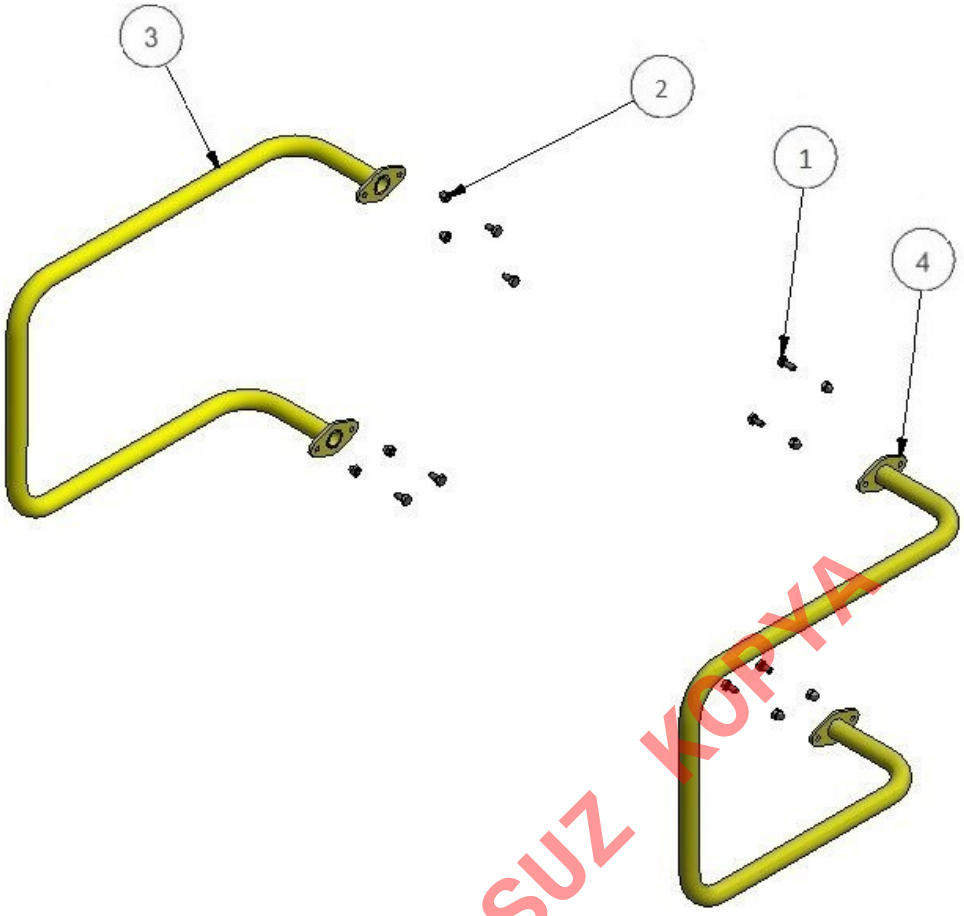

Image 57: Installation of Barrier

KONTROLSUZ KOPYA

Ref	Part Code	Explanation	Ops	Pcs
1	100100070004	Bolts / M10x20mm	S	8
2	100201990001	Nuts / M10	S	8
3	ORVALLKRGSAA002	Right Handle Bar Installation	S	1
4	ORVALLKRGSAA001	Left Handle Bar Installation	S	1

Table 26:Handle Bar Connection Parts Table

6.1.15 Container Lid Opening Installation

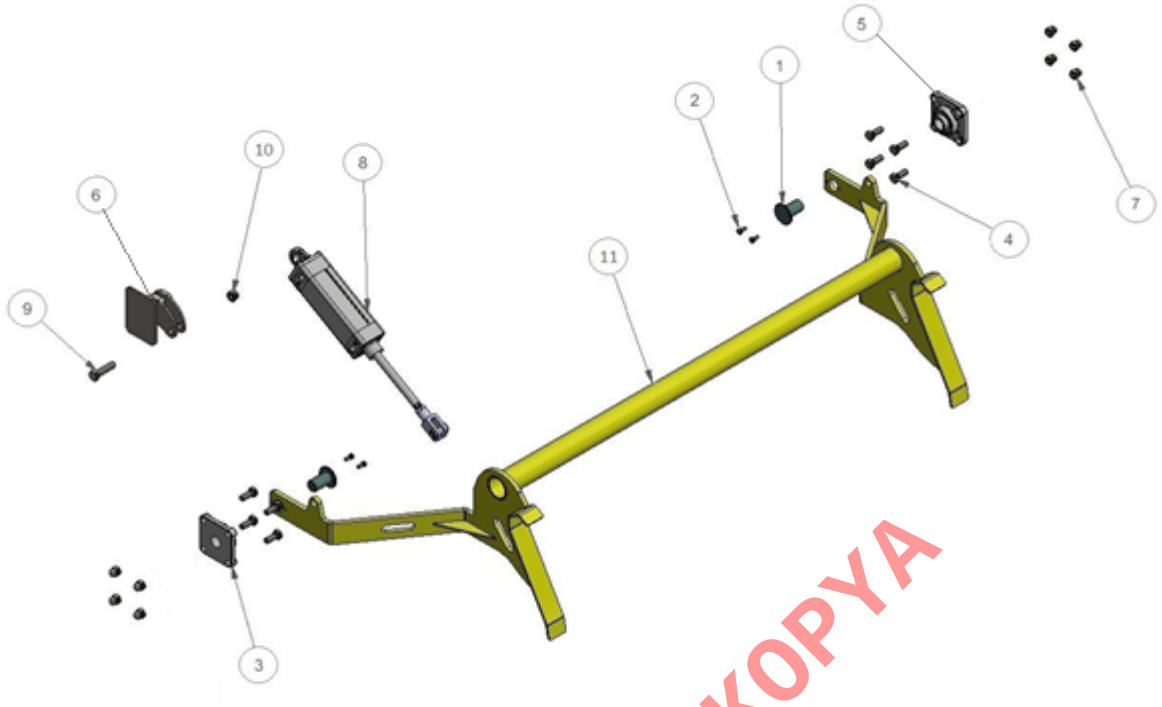

Image 58: Installation of Container Opener Bar

KONTROLSÜZ KOPYA

Ref	Part Code	Explanation	Op	Pcs
1	ORVALLVUTSAA003	Connection Shaft	S	2
2	100100070096	Bolts / M8x16 mm	S	4
3	101200810001	Bearing	S	1
4	100100070090	Bolts / M12x30 mm	S	8
5	101200810001	Bearing	S	1
6	ORVALLVUMSAA003	Pneumatic Piston Connection Installation	S	2
7	100200720003	Nuts / M12	S	8
8	TMOALLPNPSAA001	Container Lid Opening System Pneumatic Piston (ORV 400)	S	1
9	100100100081	Bolts /M16X60mm	S	1
10	100200390002	Nuts / M16	S	1
11	ORV400KAGSAA001	Container Lid Opening Installation (ORV 400)	S	1
	ORV300KAGSAA001	Container Lid Opening Installation (ORV 300)		
	ORV200KAGSAA002	Container Lid Opening Installation (ORV 200)		

Table 27: Container Lid Opening Connection Parts Table

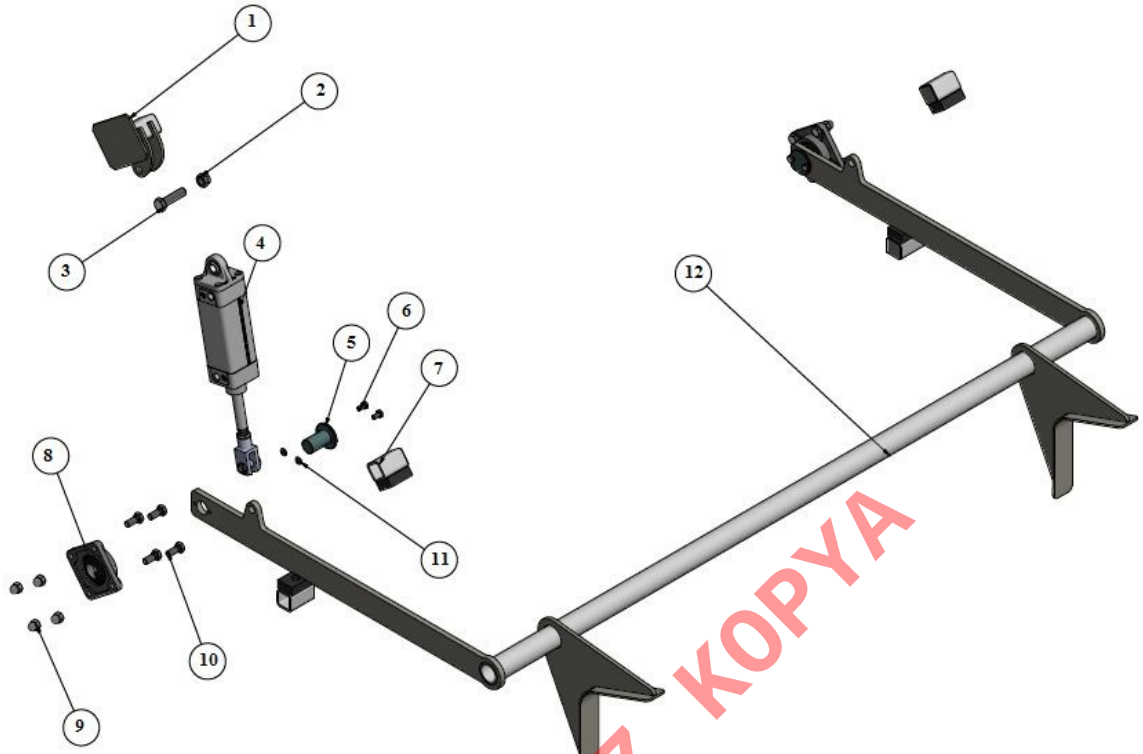

KONTROLSUZ KOPYA

Ref	Part Code	Explanation	Op	Pcs
1	ORVALLVUMSAA003	Pneumatic Piston Connection Installation	S	2
2	100200390002	Nuts / M16	S	1
3	100100100081	Bolts /M16X60mm	S	1
4	TMOALLPNPSAA003	Container Lid Opening System Pneumatic Piston(ORV 200-300)	O	1
5	ORVALLVUTSAA003	Connection Shaft	S	2
6	100100070096	Bolts / M8x16 mm	S	4
7	ORVALLVUPSAA017	Support Rubber	S	4
8	101200810001	Bearing / Plain Bearing / Flanged Square Bearing	S	1
9	100200720003	Nuts / M12	S	8
10	100100070090	Bolts / M12x30 mm	S	8
11	101100710006	Stamps and Washers / Spring Washers / M8	S	4
12	ORV400KAGSAA001	Container Lid Opening Installation (ORV 400)	O	1
	ORV300KAGSAA001	Container Lid Opening Installation (ORV 300)		
	ORV200KAGSAA002	Container Lid Opening Installation (ORV 200)		

Table 28: Container Lid Opening Connection Elements Table -2

6.1.16 Container Support Installation

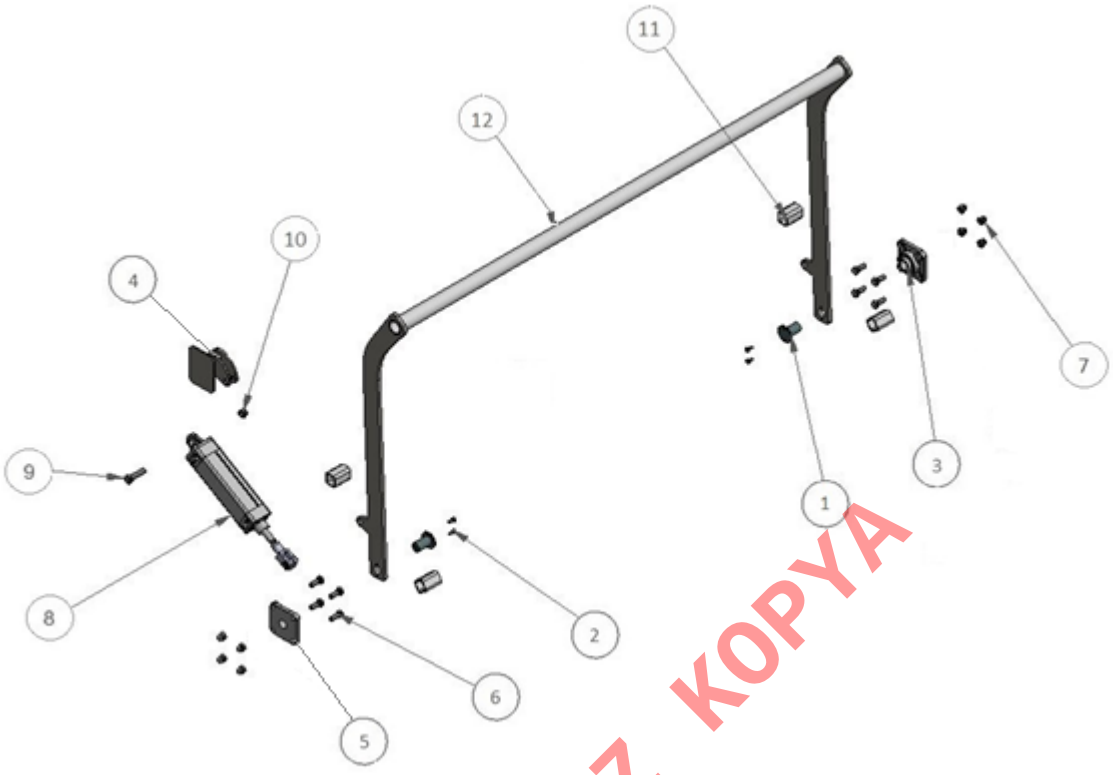

Image 59: Installation of Bin Stopper

KONTROLSUZ KOPYA

Ref	Part Code	Explanation	Op	Pcs
1	ORVALLVUTSAA003	Connection Shaft	S	2
2	100100070096	Bolts / M8x16 mm	S	4
3	101200810001	Bearing	S	1
4	ORVALLVUMSAA003	Pneumatic Piston Connection Installation	S	2
5	101200810001	Bearing	S	1
6	100100070090	Bolts / M12x30 mm	S	8
7	100200720003	Nuts / M12	S	8
8	TMOALLPNPSAA002	Pneumatic Piston (ORV 400)	S	1
	TMOALLPNPSAA003	Pneumatic Piston (ORV 200-300)		
9	100100100081	Bolts /M16X60mm	S	1
10	100200390002	Nuts / M16	S	1
11	ORVALLVUPSAA014	Container Support Installation Stopper Profile	S	4
12	ORV400KDGSAA001	Support (ORV 400)	S	1
	ORV300KDGSAA001	Support (ORV 300)		
	ORV200KDGSAA001	Support (ORV 200)		

Table 29: Container Support Connection Parts Table

6.1.17 Skiploader Arm Installation

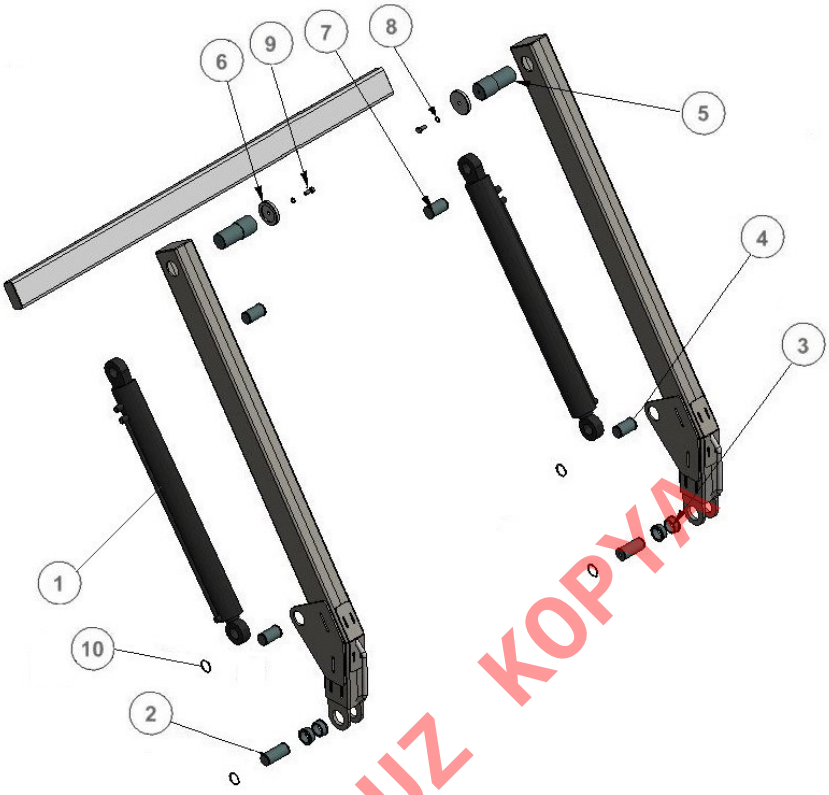

Image 60: Installation of Skiploader Booms

KONTROLSUZ KOPYA

Ref	Part Code	Explanation	Ops	Pcs
1	ORVALLHDPSAA025	Skiploader Arm Piston	S	2
2	ORV400SKTSAA008	Skiploader Connection Shaft-1	S	2
3	ORV400SKTSAA006	Skiploader Connection Bushes	S	4
4	ORV400SKTSAA002	Skiploader Connection Shaft -2	S	2
5	ORV400SKTSAA005	Skiploader Connection Shaft -3	S	2
6	ORV400SKTSAA004	Skiploader Connection Stamps	S	2
7	ORV400SKTSAA003	Skiploader Connection Shaft-4	S	2
8	101100710010	Stamps and Washers / Spring Washers / M14	S	2
9	100100070104	Bolts / M14x35mm	S	2
10	100300450004	Piston Rings / External Rings	S	4

Table 30: Skiploader Arms Connection Elements Table

6.1.18 Skiploader Stabilizer Installation

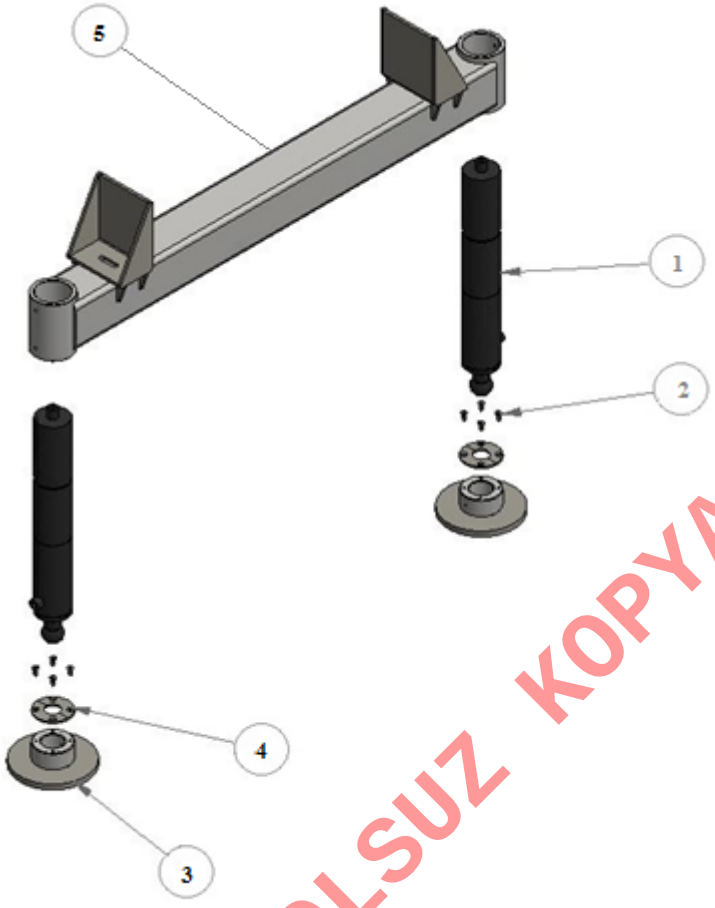

KONTROLSUZ KOPYA

Image 61: Installation Skiploader Stabilizer

Ref	Part Code	Explanation	Op	Pcs
1	ORV400HDPSAA114	Skiploader Stabilizer Pistons	S	2
2	100100270017	Bolts / M8x20mm	S	8
3	ORV400SGTSAA001 ORV400SGPSAA005	Leg Shoe Installation	S	2
4	ORV400SGPSAA006	Leg Shoe Connection Flange	S	4
5	ORV400SGGSAA001	Skiploader Chassis Support Installation	O	1

Table 31: Skiploader Stabilizer Connection Elements Table

6.1.19 Washing System

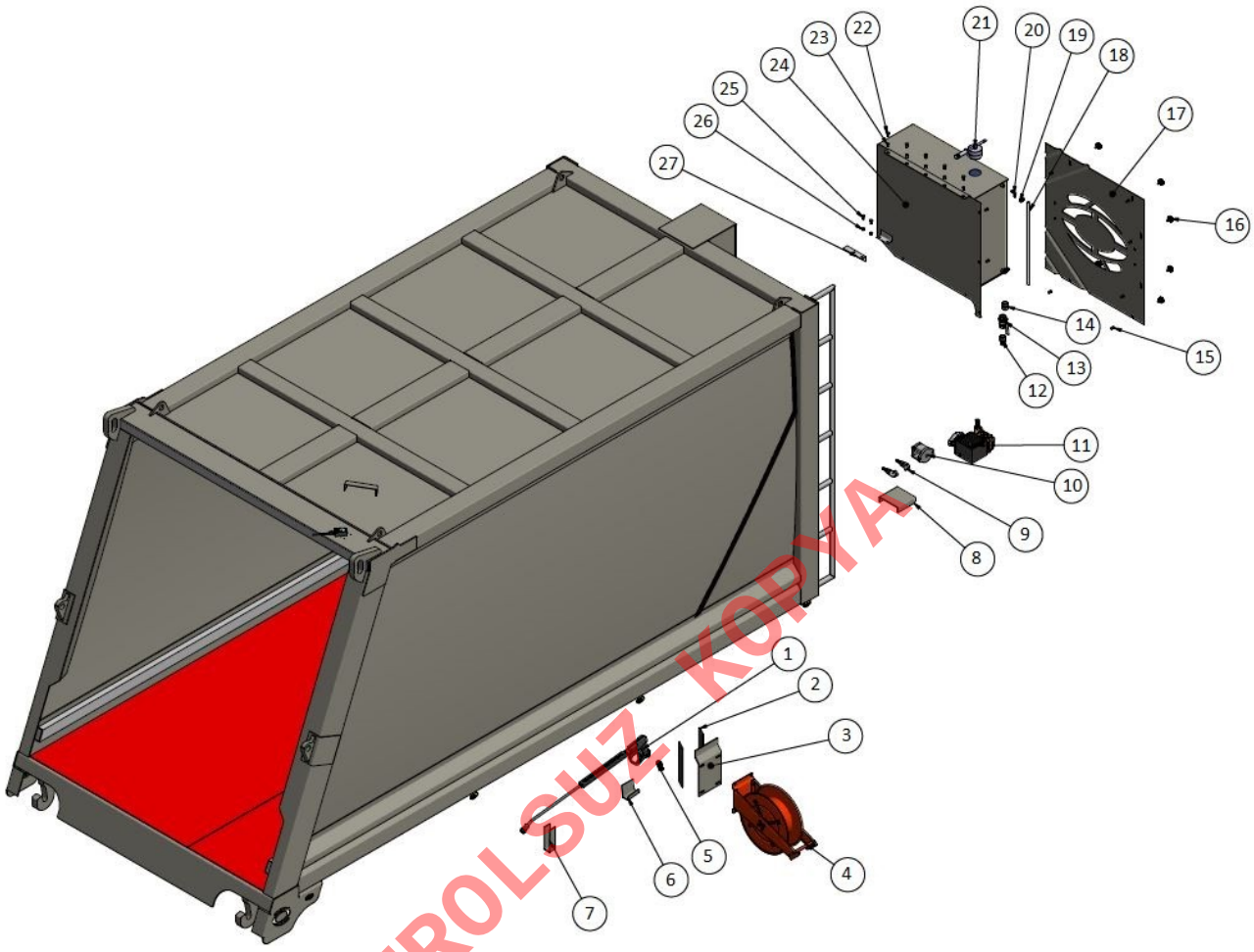

KONTROLSUZ KOPYA

Ref	Part Code	Explanation	Op	Pcs
1	TMOALLVUMSAA001	ORV 400 Series Water Pistol	O	1
2	ORV400TSPSAA009	Hose Drum Support Plate	O	2
3	ORV400TSPSAA008	Hose Drum Plate	O	1
4	051001590001	Hydraulic Drums / Water Hose Drum	O	1
5	050400730002	Hydraulic Records / BSP-Metric / Manometer Record / 1/4" 12S	O	M20x1.5
6	ORV400TSPSAA010	Pistol Hold Plate 1	O	1
7	ORV400TSPSAA012	Pistol Hold Plate 2	O	1
8	ORV400TSPSAA007	Pump Support Plate	O	1
9	052301410004	Hydraulic Pump Materials / Hydraulic Pump Adapter	O	2
10	050701350001	Hydromotor / Geared Motor	O	1
11	105601940002	Pumps / Water Pumps	O	1
12	050101130005	Plumbing Records/ Brass / Hose Tightening / 1" Ø27	O	1
13	101000640010	Ball Valves / Geared 2 Parted / PN25 / 1" DN40	O	1
14	050100480004	Plumbing Records / Nipple / 1" Galvanized	O	1
15	100200480004	Nuts / Rivet Nut / Round Body / M8	O	6
16	100100910001	Bolts / Plastic Head / M8x18 mm	O	6
17	ORV400KSMSAA009	ORV 400 Series Front Repair Cover	O	1
18	103301590046	Hoses / PVC Transparent Hose	O	1

19	101501650001	Clamps / Sheet Clamps / 10x16 Erbi Clamp	O	2
20	050101130006	Plumbing Records / Brass / Hose Tightening / 1/4" Ø8	O	2
21	100701000001	Cover Lock Accessories / Chain Blind Plug / Waste Water Drain Plug	O	1
22	100100070004	Bolts / M10x20 mm	O	
23	100200480001	Nuts / Rivet Nuts / M10	O	
24	ORV400TSGSAA001	ORV 400 Series Clean Water Tank	O	1
25	100100070004	Bolts/ M10x20 mm	O	
26	100200400009	Nuts / M10	O	
27	ORV400TSPSAA005	ORV 400 Series Clean Water Connection Panel	O	1

Table 32: Washing System Connection Elements Table

6.1.20 Installation of Hydraulic and Pneumatic Connections

6.1.20.1 Hydraulic Piston Locations and Installation

KONTROLSUZ KOPYA

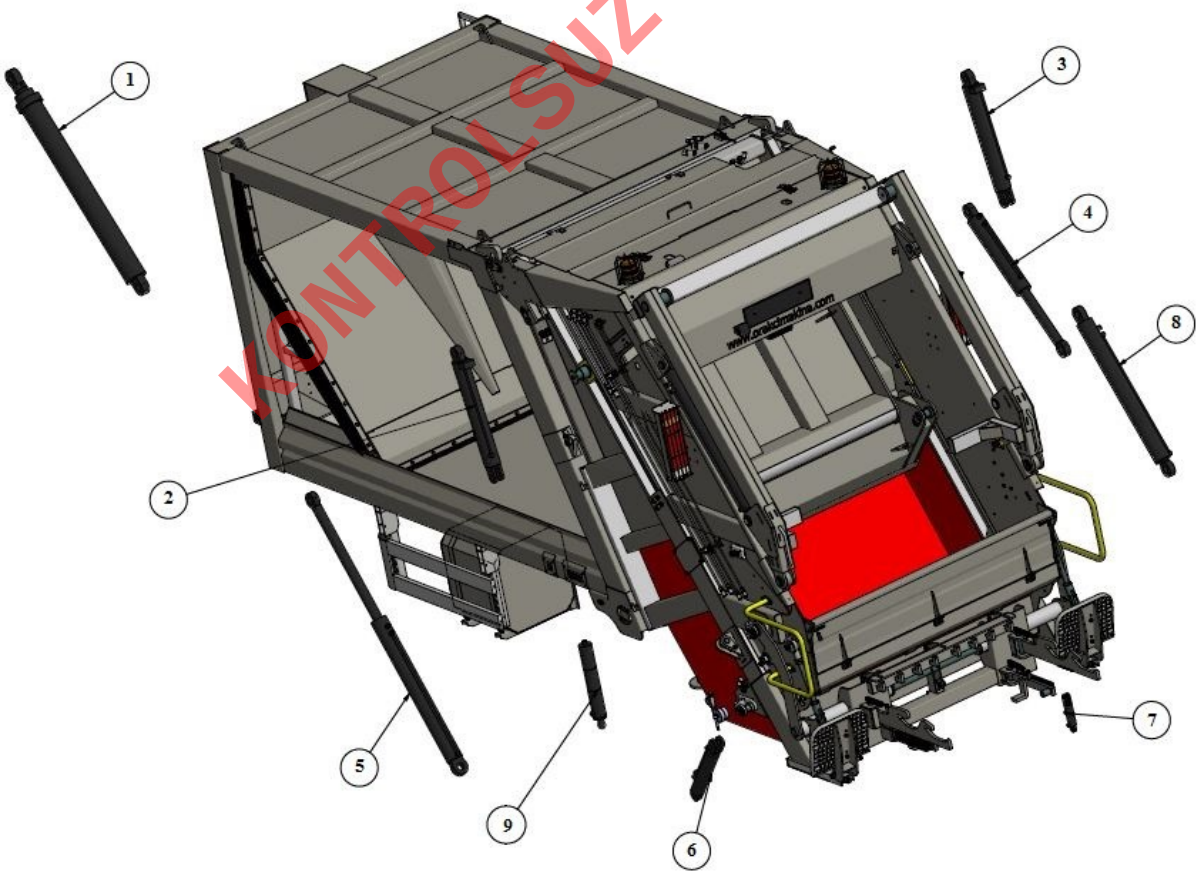

Image 62: *Locations and Installation of Hydraulic Piston*

Ref	Part Code	Explanation	Ops	Pcs
1	ORV200HDPSAA004	ORV 205 // 2 Stage Telescopic Piston		
	ORV200HDPSAA003	ORV 206 // 2 Stage Telescopic Piston		
	ORV200HDPSAA002	ORV 207 // 2 Stage Telescopic Piston		
	ORV200HDPSAA001	ORV 208 // 2 Stage Telescopic Piston		
	ORV200HDPSAA005	ORV 209 // 3 Stage Telescopic Piston		
	ORV200HDPSAA012	ORV 210 // 3 Stage Telescopic Piston		
	ORV300HDPSAA006	ORV 310 // 2 Stage Telescopic Piston		
	ORV300HDPSAA007	ORV 311 // 2 Stage Telescopic Piston		
	ORV300HDPSAA008	ORV 312 // 2 Stage Telescopic Piston		
	ORV300HDPSAA009	ORV 313 // 2 Stage Telescopic Piston		
	ORV300HDPSAA010	ORV 314 // 2 Stage Telescopic Piston	S	1
	ORV300HDPSAA011	ORV 315 // 2 Stage Telescopic Piston		
	ORV300HDPSAA012	ORV 316 // 3 Stage Telescopic Piston		
	ORV400HDPSAA099	ORV 413 // 2 Stage Telescopic Piston		
	ORV400HDPSAA100	ORV 414 // 2 Stage Telescopic Piston		
	ORV400HDPSAA101	ORV 415 // 2 Stage Telescopic Piston		
	ORV400HDPSAA001	ORV 416 // 3 Stage Telescopic Piston		
	ORV400HDPSAA091	ORV 417 // 3 Stage Telescopic Piston		
	ORV400HDPSAA092	ORV 418 // 3 Stage Telescopic Piston		
	ORV400HDPSAA093	ORV 419 // 3 Stage Telescopic Piston		
	ORV400HDPSAA094	ORV 420 // 3 Stage Telescopic Piston		
	ORV400HDPSAA095	ORV 421 // 4 Stage Telescopic Piston		
	ORV400HDPSAA096	ORV 422 // 4 Stage Telescopic Piston		
	ORV400HDPSAA097	ORV 423 // 4 Stage Telescopic Piston		
	ORV400HDPSAA098	ORV 424 // 4 Stage Telescopic Piston		
2	ORV200HDPSAA009	ORV 200 Series Tailgate Lifting Piston (Left)	S	1
	ORV300HDPSAA001	ORV 300 Series Tailgate Lifting Piston (Left)		
	ORV400HDPSAA106	ORV 400 Series Tailgate Lifting Piston (Left)		
3	ORV200HDPSAA010	ORV 200 Series Tailgate Lifting Piston (Right)	S	1
	ORV300HDPSAA002	ORV 300 Series Tailgate Lifting Piston (Right)		
	ORV400HDPSAA107	ORV 400 Series Tailgate Lifting Piston (Right)		
4	ORV400HDPSAA108	ORV 400 Series Blade Piston	S	2
	ORV300HDPSAA003	ORV 300 Series Blade Piston		
	ORV200HDPSAA011	ORV 200 Series Blade Piston		
5	ORV200HDPSAA008	ORV 200 Series Slide Piston // 5 m3 – 9 m3	S	2
	ORV200HDPSAA013	ORV 200 Series Slide Piston // 10 m3 – 14 m3		
	ORV300HDPSAA004	ORV Series Slide Piston // 10 m3 – 14 m3		
	ORV300HDPSAA013	ORV 300 Series Slide Piston // 15 m3 – 18 m3		
	ORV400HDPSAA111	ORV 400 Series Slide Piston // 10 m3 – 14 m3		
	ORV400HDPSAA109	ORV 400 Series Slide Piston // 15 m3 – 18 m3		
	ORV400HDPSAA110	ORV 400 Series Slide Piston // 19 m3 – 28 m3		
6	ORVALLHDPSAA021	ORV 200-300-400 Bin Lifter Piston	O	2
7	TMOALLHDPSAA002	ORV 200-300-400 Bin Lifter Locking Piston	O	2
8	ORV400HDPSAA112	ORV 400 Series Skiploader Arms Piston	O	2
9	ORV400HDPSAA114	ORV 400 Series Skiploader Stabilizer Piston	O	2

KONTROLSÜZ KOPYA

Table 33: Hydraulic Pistons

6.1.20.2 Hydraulic Piston Repair Kit Sets

KONTROLSUZ KOPYA

Image 63: Hydraulic Piston and Repair Kits for Visual Purposes

Ref	Part Code	Explanation	Ops	Pcs
1	Please look at Table.33	400 Series Telescopic Piston Repair Kit Set	S	1
		300 Series Telescopic Piston Repair Kit Set		
		200 Series Telescopic Piston Repair Kit Set		
2	ORV400HDMSAA058	400 Series Tailgate Left Piston Repair Kit Set	S	1
	ORV300HDMSAA008	300 Series Tailgate Left Piston Repair Kit Set		
	ORV200HDMSAA034	200 Series Tailgate Left Piston Repair Kit Set		
3	ORV400HDMSAA059	400 Series 15m³-18m³ Slide Piston Repair Kit Set	S	1
	ORV400HDMSAA060	400 Series 19m³-28m³ Slide Piston Repair Kit Set		
	ORV300HDMSAA012	300 Series 15 m³- 18 m³ Slide Piston Repair Kit Set		

	ORV300HDMSAA009	300 Series Slide Piston 10 m³- 14 m³ Repair Kit Set		
	ORV200HDMSAA030	200 Series Slide Piston 10 m³- 14 m³ Repair Kit Set		
	ORV200HDMSAA031	200 Series Slide Piston 5 m³-9 m³ Repair Kit Set		
4	ORV400HDMSAA061	400 Series Skiploader Stabilizer Piston Repair Kit Set	S	1
5	ORVALLHDMSAA004	Piston Repair Kit Set	S	1
6	ORV400HDMSAA063	400 Series Skiploader Arm Piston Repair Kit Set	S	1
7	ORV400HDMSAA064	400 Series Blade Piston Repair Kit Set	S	1
	ORV300HDMSAA010	300 Series Blade Piston Repair Kit Set		
	ORV200HDMSAA032	200 Series Blade Piston Repair Kit Set		
8	ORV400HDMSAA065	400 Series Tailgate Right Piston Repair Kit Set	S	1
	ORV300HDMSAA011	300 Series Tailgate Right Piston Repair Kit Set		
	ORV200HDMSAA033	200 Series Tailgate Right Piston Repair Kit Set		

Equipment Code	Part Code	Explanation	Optionally	Pcs
ORV 205	ORV200HDMSAA024	2 Level/Shaft: Ø50 – Ø55 /Telescopic Piston Repair Kit Set	S	1
ORV 206	ORV200HDMSAA025	2 Level/Shaft: Ø50 – Ø55 /Telescopic Piston Repair Kit Seti	S	1
ORV 207	ORV200HDMSAA026	2 Level/Shaft: Ø50 – Ø55 /Telescopic Piston Repair Kit Set	S	1
ORV 208	ORV200HDMSAA027	2 Level/Shaft Ø50 – Ø55/Telescopic Piston Repair Kit Set	S	1
ORV 209	ORV200HDMSAA028	2 Level/Shaft:Ø50 – Ø5 /Telescopic Piston Repair Kit Set	S	1
ORV 210	ORV200HDMSAA029	2 Level/Shaft:Ø50 – Ø55/ Telescopic Piston Repair Kit Set Seti S	S	1
ORV 310	ORV300HDMSAA001	2 Level / Shaft: Ø50 – Ø55 /Telescopic Piston Repair Kit Set Kit Set	S	1
ORV 311	ORV300HDMSAA002	2 Level /Shaft: Ø 75 / Telescopic Piston Repair Kit Set	S	1
ORV 312	ORV300HDMSAA003	2 Level / Shaft: Ø 75 / Telescopic Piston Repair Kit Set	S	1
ORV 313	ORV300HDMSAA004	2 Level / Shaft: Ø 75 Telescopic Piston Repair Kit Set	S	1
ORV 314	ORV300HDMSAA005	2 Level / Shaft: Ø 75 / Telescopic Piston Repair Kit Set	S	1
ORV 315	ORV300HDMSAA006	2 Level / Shaft: Ø 75 / Telescopic Piston Repair Kit Set	S	1
ORV 316	ORV300HDMSAA007	3 Level / Shaft: Ø 75 / Telescopic Piston Repair Kit Set	S	1
ORV 413	ORV400HDMSAA066	2 Level / Shaft: Ø75 / Telescopic Piston Repair Kit Set	S	1
ORV 414	ORV400HDMSAA067	2 Level / Shaft: Ø75 / Telescopic Piston Repair Kit Set	S	1
ORV 415	ORV400HDMSAA068	2 Level / Shaft: Ø75 / Telescopic Piston Repair Kit Set	S	1

KONTROLSÜZ KOPYA

ORV 416	ORV400HDMSAA069	3 Level / Shaft: Ø75 / Set	Telescopic Piston Repair Kit	1
ORV 417	ORV400HDMSAA070	3 Level / Shaft: Ø75 Set	Telescopic Piston Repair Kit	1
ORV 418	ORV400HDMSAA071	3 Level / Shaft: Ø75 / Set	Telescopic Piston Repair Kit	1
ORV 419	ORV400HDMSAA072	3 Level / Shaft: Ø75 Set	Telescopic Piston Repair Kit	1
ORV 420	ORV400HDMSAA073	3 Level / Shaft: Ø75 / Set	Telescopic Piston Repair Kit	1
ORV 421	ORV400HDMSAA074	4 Level / Shaft: Ø75 / Set	Telescopic Piston Repair Kit	1
ORV 422	ORV400HDMSAA075	4 Level / Shaft: Ø75 / Set	Telescopic Piston Repair Kit	1
ORV 423	ORV400HDMSAA076	4 Level / Shaft: Ø75 / Set	Telescopic Piston Repair Kit	1
ORV 424	ORV400HDMSAA077	4 Level / Shaft: Ø75 / Set	Telescopic Piston Repair Kit	1

Table 34 : Repair Kit Set Table

KONTROLSUZ KOPYA

6.1.20.3 Installation of Hydraulic Connection of Tailgate

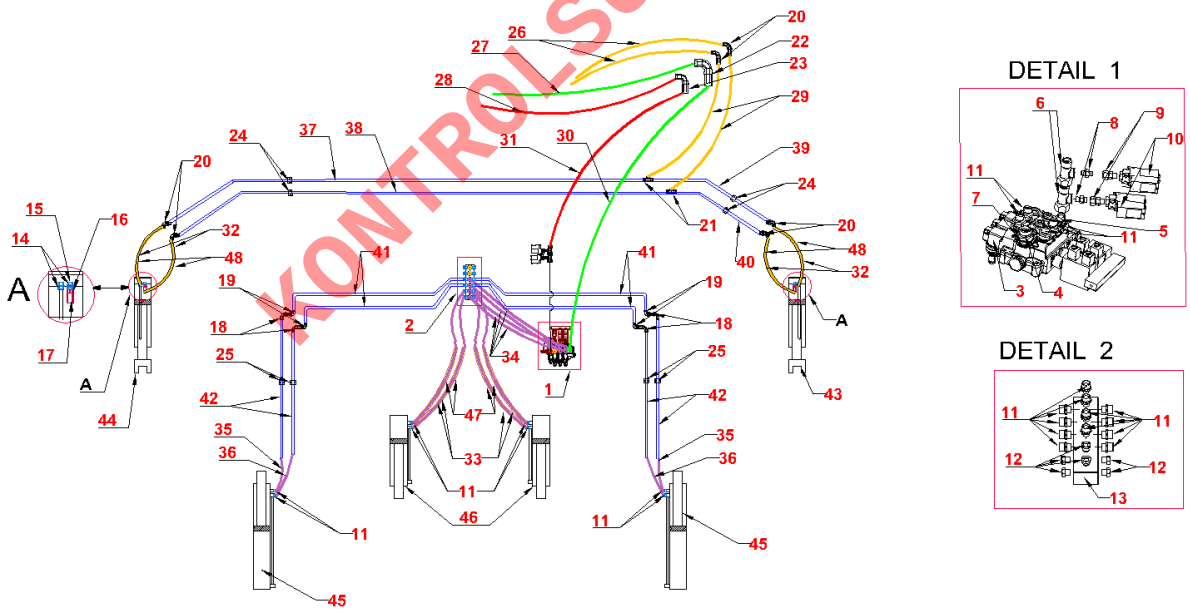

Image 64: Hydraulic Connections of Tailgate Equipment

Ref	Part Code	Explanations	Op	Pcs
1	Please consult with After Sales	ORV 400-300-200 Way Control Valve Assembling	D	1
2	ORVALLHDMSAA001	Without Collector Assembling	S	1
3	Please consult with After Sales	Way Control Valve	D	1
4	050400180011	Hydraulic Couplings / Bsp - Metric / Flat Couplings / 3/4 " 25S M36x2	S	1
5	050400180031	Hydraulic Couplings / Bsp - Metric / Flat Couplings / 1/2 "20S M30x2	S	1
6	050400820001	Hydraulic Couplings / Metric / Side Leg Fittings / Optional / 1/4 " 20S M30x1.5	O	1
7	050400340016	Hydraulic Couplings / BSP / Reduction / 1/2 "- 3/4" Pipe	S	1
8	050400180019	Hydraulic Couplings / BSP - Metric / Flat Couplings / 1/4" 10L M16X1.5	O	2
9	050400190008	Hydraulic Couplings / BSP - Metric / Reverse Couplings - with Pin / 1/4 "10L M16x1.5	O	2
10	051100840006	Switch / Telemechanic Pressure Switch / Pressure Switch	O	2
11	050400180005	Hydraulic Couplings / Bsp - Metric / Flat Coupling / 1/2 " 16S M24x1.5	S	20
12	050400290001	Hydraulic Couplings / Metric / Blind Plug / 1/2 "	O	6
13	ORVALLHDPSAA017	Collector	S	1
14	050400180007	Hydraulic Couplings / Bsp - Metric / Flat Couplings / 1/2 " 16S M20x1.5	S	4
15	101100700002	Stamps And Washers / Copper Washer/ 1/2"	S	2
16	050301300003	Valves / Hose Burst Valve / Vuba 120 1/2" Cartridge	S	2
17	050301300007	Valves / Hose Burst Valve / Vuba 120 1/2" Sleeve	S	2
18	050400560004	Hydraulic Couplings / Metric / Elbows / Pipe Connection Baffle / S Type / M24x1.5 16S	S	4
19	050400580003	Hydraulic Couplings / Metric / Elbows / Pipe Connection Wall Transition / S Type /16S M24x1.5	S	4
20	050400560001	Hydraulic Couplings / Metric / Elbows / Pipe Connection Wall Transition / S Type / M20x1.5 12S	S	6
21	050400260001	Hydraulic Fittings / Metric / T Fittings / 12S M20x1.5	S	2
22	050400560006	Hydraulic Fittings / Metric / Elbows / Pipe Fitting Baffle / S Type / M36x2	S	1
23	050400560005	Hydraulic Fittings / Metric / Elbows / Pipe Connection Baffle / S Type / M30x2 20S	S	1
24	101500860012	Couplings / Plastic / Pipe Fitting Baffle / Ø12 Double Fish Plate	S	4
25	101500860015	Couplings / Plastic / Pipe Fitting Baffle / Ø16 Double Fish Plate	S	4
26	ORVALLHTMSAA016	3/8 R2 Tailgate Body Connection Hydraulic Hose	S	2
27	ORVALLHTMSAA017	1" R2 Tailgate Body Connection Hydraulic Hose	S	1
28	ORVALLHTMSAA018	3\4" R2 Tailgate Body Connection Hydraulic Hose	S	1
29	ORVALLHTMSAA006	3\8" R2 Tailgate Body Connection Hydraulic Hose	S	2
30	ORV400HTMSAA083	1" R2 Tailgate Body Connection Hydraulic Hose	S	1
	ORV300HTMSAA017	1" Tailgate Return Line Hydraulic Hose	S	

KONTROLSUZ KOPYA

	ORV200HTMSAA016	1" Tailgate Return Line Hydraulic Hose	S	
31	ORVALLHTMSAA010	3\4" R Tailgate Pressure Line Hydraulic Hose(ORV 300-400)	S	1
	ORV200HTMSAA017	3\4" Tailgate Pressure Line Hydraulic Hose	S	
32	ORVALLHTMSAA007	3\8" R2 Tailgate Lifting Piston Hose	S	1
33	ORV400HTMSAA022	1/2" R2 Packer Piston Hose	S	4
	ORV300HTMSAA018	1/2" R2 Packer Piston Hose	S	
	ORV200HTMSAA018	1/2" R2 Packer Piston Hose	S	
34	ORVALLHTMSAA011	1\2" R2 Command Arm Ejector Paddle-Packer Hose (ORV 300 -400)	S	4
	ORV200HTMSAA019	1/2" R2 Command Arm Ejector Paddle-Packer Hose	S	
35	ORV400HTMSAA023	1/2" R2 Sled Piston Hose	S	2
	ORV300HTMSAA020	1/2" R2 Sled Piston Hose	S	
	ORV200HTMSAA020	1/2" R2 Sled Piston Hose	S	
36	ORV400HTMSAA024	1/2" R2 Sled Piston Hose	S	2
	ORV300HTMSAA019	1/2" R2 Sled Piston Hose	S	
	ORV200HTMSAA021	1/2" R2 Sled Piston Hose	S	
37	ORV400HTMSAA025	Ø12 Tailgate Lift Line Hydraulic Pipe	S	1
	ORV300HTMSAA021	Ø12 Tailgate Lift Line Hydraulic Pipe	S	
	ORV200HTMSAA022	Ø12 Tailgate Lift Line Hydraulic Pipe	S	
38	ORV400HTMSAA026	Ø12 Tailgate Lift Line Hydraulic Pipe	S	1
	ORV300HTMSAA022	Ø12 Tailgate Lift Line Hydraulic Pipe	S	
	ORV200HTMSAA023	Ø12 Tailgate Lift Line Hydraulic Pipe	S	
39	ORV400HTMSAA027	Ø12 Tailgate Lift Line Hydraulic Pipe	S	1
	ORV300HTMSAA024	Ø12 Tailgate Lift Line Hydraulic Pipe	S	
	ORV200HTMSAA024	Ø12 Tailgate Lift Line Hydraulic Pipe	S	
40	ORV400HTMSAA028	Ø12 Tailgate Lift Line Hydraulic Pipe	S	1
	ORV300HTMSAA023	Ø12 Tailgate Lift Line Hydraulic Pipe	S	
	ORV200HTMSAA025	Ø12 Tailgate Lift Line Hydraulic Pipe	S	
41	ORV400HTMSAA029	Ø16 Ejector Paddle Line Hydraulic Pipe	S	4
	ORV300HTMSAA025	Ø16 Ejector Paddle Line Hydraulic Pipe	S	

KONTROLSUZ KOPYA

	ORV200HTMSAA026	Ø16 Ejector Paddle Line Hydraulic Pipe	S	
42	ORV400HTMSAA043	Ø16 Ejector Paddle Line Hydraulic Pipe	S	4
43	ORV400HDPSAA107	ORV 400 Series Tailgate Right Piston	S	1
	ORV300HDPSAA002	ORV 300 Series Tailgate Right Piston	S	
	ORV200HDPSAA010	ORV 200 Series Tailgate Right Piston	S	
44	ORV400HDPSAA106	ORV 400 Series Tailgate Left Piston	S	1
	ORV300HDPSAA001	ORV 300 Series Tailgate Left Piston	S	
	ORV200HDPSAA009	ORV 200 Series Tailgate Left Piston	S	
45	ORV200HDPSAA008	ORV 200 Series Ejector Paddle Piston // 5 m3 – 9 m3	S	2
	ORV200HDPSAA013	ORV 200 Series Ejector Paddle Piston // 10 m3 – 14 m3	S	
	ORV300HDPSAA004	ORV 300 Series Ejector Paddle Piston // 10 m3 – 14 m3	S	
	ORV400HDPSAA111	ORV 400 Series Ejector Paddle Piston // 10 m3 – 14 m3	S	
	ORV400HDPSAA109	ORV 400 Series Ejector Paddle Piston // 15 m3 – 18 m3	S	
	ORV400HDPSAA110	ORV 400 Series Ejector Paddle Piston // 19 m3 – 28 m3	S	
46	ORV400HDPSAA108	ORV 400 Series Packer Piston	S	1
	ORV300HDPSAA003	ORV 300 Series Packer Piston	S	
	ORV200HDPSAA011	ORV 200 Series Packer Piston	S	
47	103301590026	Hoses / 2" Flat Transmitter Orange Hose	S	4
48	052001250020	Hydraulic Hoses / 20-25 Spiral Hydraulic Hose Protector	S	4
49	050400990007	Hydraulic Union / BSP – Metric / Contra Elbows / 1/2 16S M24x1.5 (ORV 200 -300)	S	4
	050400180005	Hyd. Rec. / Bsp - Metric / Flat Elbow / 1/2" 16S M24x1.5		

KONTROLSÜZ KOPYA

Table 35: Tailgate Hydraulic Chart

6.1.20.4 Tailgate Hydraulic Connections

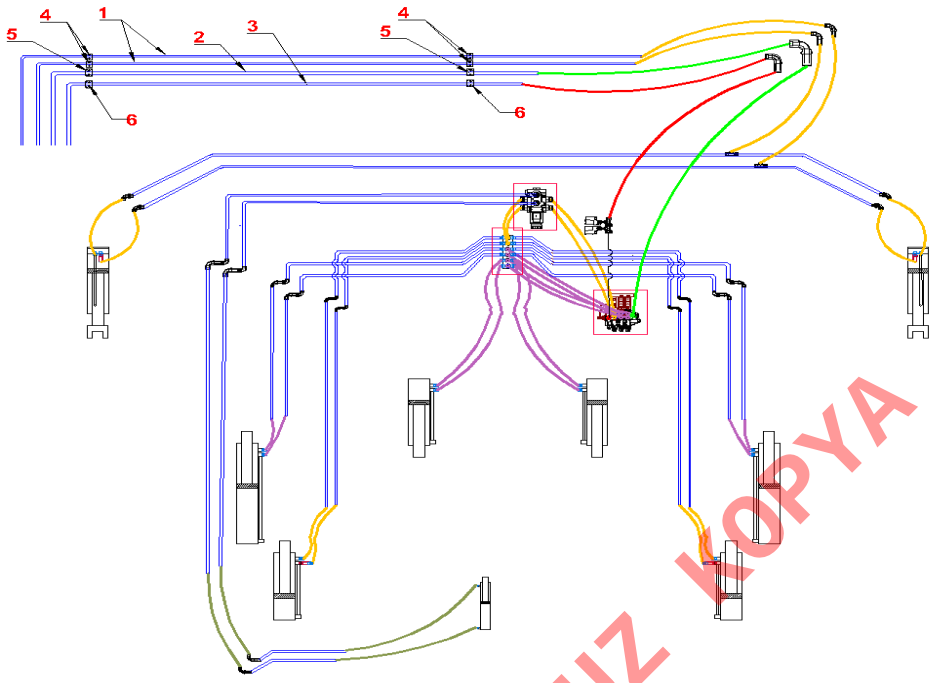

Image 65: Tailgate Hydraulic Schema

KONTROLSUZ KOPYA

Ref	Part Code	Explanations	Op	Ad
1	ORV400HTMRAA001	ORV 413 Up of Body's Tailgate Lifting Pipes	S	2
	ORV400HTMRAA002	ORV 414 Up of Body's Tailgate Lifting Pipes	S	2
	ORV400HTMRAA003	ORV 415 Up of Body's Tailgate Lifting Pipes	S	2
	ORV400HTMRAA004	ORV 416 Up of Body's Tailgate Lifting Pipes	S	2
	ORV400HTMRAA005	ORV 417 Up of Body's Tailgate Lifting Pipes	S	2
	ORV400HTMRAA006	ORV 418 Up of Body's Tailgate Lifting Pipes	S	2
	ORV400HTMRAA007	ORV 419 Up of Body's Tailgate Lifting Pipes	S	2
	ORV400HTMRAA008	ORV 420 Up of Body's Tailgate Lifting Pipes	S	2
	ORV400HTMRAA009	ORV 421 Up of Body's Tailgate Lifting Pipes	S	2
	ORV400HTMRAA010	ORV 422 Up of Body's Tailgate Lifting Pipes	S	2
	ORV400HTMRAA011	ORV 423 Up of Body's Tailgate Lifting Pipes	S	2
	ORV400HTMRAA012	ORV 424 Up of Body's Tailgate Lifting Pipes	S	2
	ORV400HTMRAA013	ORV 425 Up of Body's Tailgate Lifting Pipes	S	2
	ORV400HTMRAA014	ORV 426 Up of Body's Tailgate Lifting Pipes	S	2

	ORV400HTMRAA015	ORV 427 Up of Body's Tailgate Lifting Pipes	S	2
	ORV400HTMRAA016	ORV 428 Up of Body's Tailgate Lifting Pipes	S	2
	ORV300HTMRAA015	ORV 310 Up of Body's Tailgate Lifting Pipes	S	2
	ORV300HTMRAA016	ORV 311 Up of Body's Tailgate Lifting Pipes	S	2
	ORV300HTMRAA017	ORV 312 Up of Body's Tailgate Lifting Pipes	S	2
	ORV300HTMRAA018	ORV 313 Up of Body's Tailgate Lifting Pipes	S	2
	ORV300HTMRAA019	ORV 314 Up of Body's Tailgate Lifting Pipes	S	2
	ORV300HTMRAA020	ORV 315 Up of Body's Tailgate Lifting Pipes	S	2
	ORV300HTMRAA021	ORV 316 Up of Body's Tailgate Lifting Pipes	S	2
	ORV200HTMRAA001	ORV 205 Up of Body's Tailgate Lifting Pipes	S	2
	ORV200HTMRAA002	ORV 206 Up of Body's Tailgate Lifting Pipes	S	2
	ORV200HTMRAA003	ORV 207 Up of Body's Tailgate Lifting Pipes	S	2
	ORV200HTMRAA004	ORV 208 Up of Body's Tailgate Lifting Pipes	S	2
	ORV200HTMRAA005	ORV 209 Up of Body's Tailgate Lifting Pipes	S	2
	ORV200HTMRAA006	ORV 210 Up of Body's Tailgate Lifting Pipes	S	2
2	ORV400HTMRAA018	ORV 413 Up of Body's Returning Line Pipes	S	1
	ORV400HTMRAA019	ORV 414 Up of Body's Returning Line Pipes	S	1
	ORV400HTMRAA020	ORV 415 Up of Body's Returning Line Pipes	S	1
	ORV400HTMRAA021	ORV 416 Up of Body's Returning Line Pipes	S	1
	ORV400HTMRAA022	ORV 417 Up of Body's Returning Line Pipes	S	1
	ORV400HTMRAA023	ORV 418 Up of Body's Returning Line Pipes	S	1
	ORV400HTMRAA024	ORV 419 Up of Body's Returning Line Pipes	S	1
	ORV400HTMRAA025	ORV 420 Up of Body's Returning Line Pipes	S	1
	ORV400HTMRAA026	ORV 421 Up of Body's Returning Line Pipes	S	1
	ORV400HTMRAA027	ORV 422 Up of Body's Returning Line Pipes	S	1
	ORV400HTMRAA028	ORV 423 Up of Body's Returning Line Pipes	S	1
	ORV400HTMRAA029	ORV 424 Up of Body's Returning Line Pipes	S	1
	ORV400HTMRAA030	ORV 425 Up of Body's Returning Line Pipes	S	1
	ORV400HTMRAA031	ORV 426 Up of Body's Returning Line Pipes	S	1
	ORV400HTMRAA032	ORV 427 Up of Body's Returning Line Pipes	S	1
	ORV400HTMRAA033	ORV 428 Up of Body's Returning Line Pipes	S	1
	ORV300HTMRAA022	ORV 310 Up of Body's Returning Line Pipes	S	1
	ORV300HTMRAA023	ORV 311 Up of Body's Returning Line Pipes	S	1
	ORV300HTMRAA024	ORV 312 Up of Body's Returning Line Pipes	S	1
	ORV300HTMRAA025	ORV 313 Up of Body's Returning Line Pipes	S	1

KONTROLSÜZ KOPYA

	ORV300HTMRAA026	ORV 314 Up of Body's Returning Line Pipes	S	1
	ORV300HTMRAA027	ORV 315 Up of Body's Returning Line Pipes	S	1
	ORV300HTMRAA028	ORV 316 Up of Body's Returning Line Pipes	S	1
	ORV200HTMRAA007	ORV 205 Up of Body's Returning Line Pipes	S	1
	ORV200HTMRAA008	ORV 206 Up of Body's Returning Line Pipes	S	1
	ORV200HTMRAA009	ORV 207 Up of Body's Returning Line Pipes	S	1
	ORV200HTMRAA010	ORV 208 Up of Body's Returning Line Pipes	S	1
	ORV200HTMRAA011	ORV 209 Up of Body's Returning Line Pipes	S	1
	ORV200HTMRAA012	ORV 210 Up of Body's Returning Line Pipes	S	1
3	ORV400HTMRAA035	ORV 413 Up of Body's Pump Pipes	S	1
	ORV400HTMRAA036	ORV 414 Up of Body's Pump Pipes	S	1
	ORV400HTMRAA037	ORV 415 Up of Body's Pump Pipes	S	1
	ORV400HTMRAA038	ORV416 Up of Body's Pump Pipes	S	1
	ORV400HTMRAA039	ORV 417 Up of Body's Pump Pipes	S	1
	ORV400HTMRAA040	ORV 418 Up of Body's Pump Pipes	S	1
	ORV400HTMRAA041	ORV 419 Up of Body's Pump Pipes	S	1
	ORV400HTMRAA042	ORV 420 Up of Body's Pump Pipes	S	1
	ORV400HTMRAA043	ORV 421 Up of Body's Pump Pipes	S	1
	ORV400HTMRAA044	ORV 422 Up of Body's Pump Pipes	S	1
	ORV400HTMRAA045	ORV 423 Up of Body's Pump Pipes	S	1
	ORV400HTMRAA046	ORV 424 Up of Body's Pump Pipes	S	1
	ORV400HTMRAA047	ORV 425 Up of Body's Pump Pipes	S	1
	ORV400HTMRAA048	ORV 426 Up of Body's Pump Pipes	S	1
	ORV400HTMRAA049	ORV 427 Up of Body's Pump Pipes	S	1
	ORV400HTMRAA050	ORV 428 Up of Body's Pump Pipes	S	1
	ORV300HTMRAA029	ORV 310 Up of Body's Pump Pipes	S	1
	ORV300HTMRAA030	ORV 311 Up of Body's Pump Pipes	S	1
	ORV300HTMRAA031	ORV 312 Up of Body's Pump Pipes	S	1
	ORV300HTMRAA032	ORV 313 Up of Body's Pump Pipes	S	1
	ORV300HTMRAA033	ORV 314 Up of Body's Pump Pipes	S	1
	ORV300HTMRAA034	ORV 315 Up of Body's Pump Pipes	S	1
	ORV300HTMRAA035	ORV 316 Up of Body's Pump Pipes	S	1
	ORV200HTMRAA013	ORV 205 Up of Body's Pump Pipes	S	1
	ORV200HTMRAA014	ORV 206 Up of Body's Pump Pipes	S	1
	ORV200HTMRAA015	ORV 207 Up of Body's Pump Pipes	S	1

KONTROLSÜZ KOPYA

	ORV200HTMRAA016	ORV 208 Up of Body's Pump Pipes	S	1
	ORV200HTMRAA017	ORV 209 Up of Body's Pump Pipes	S	1
	ORV200HTMRAA018	ORV 210 Up of Body's Pump Pipes	S	1
4	101500860020	Clamp / Plastic / Pipe Clamps /Ø12 mm Double Fish Plate M6x35 mm	S	4
5	101500860023	Clamp / Plastic / Pipe Clamps / Ø25 mm Double Fish Plate M6x45 mm	S	2
6	101500860022	Clamp / Plastic / Pipe Clamps / Ø20 mm Double Fish Plate M6x45 mm	S	2

Table 36: Body Hydraulic Chart

KONTROLSUZ KOPYA

6.1.20.5 Body Tandem Hydraulic Connections

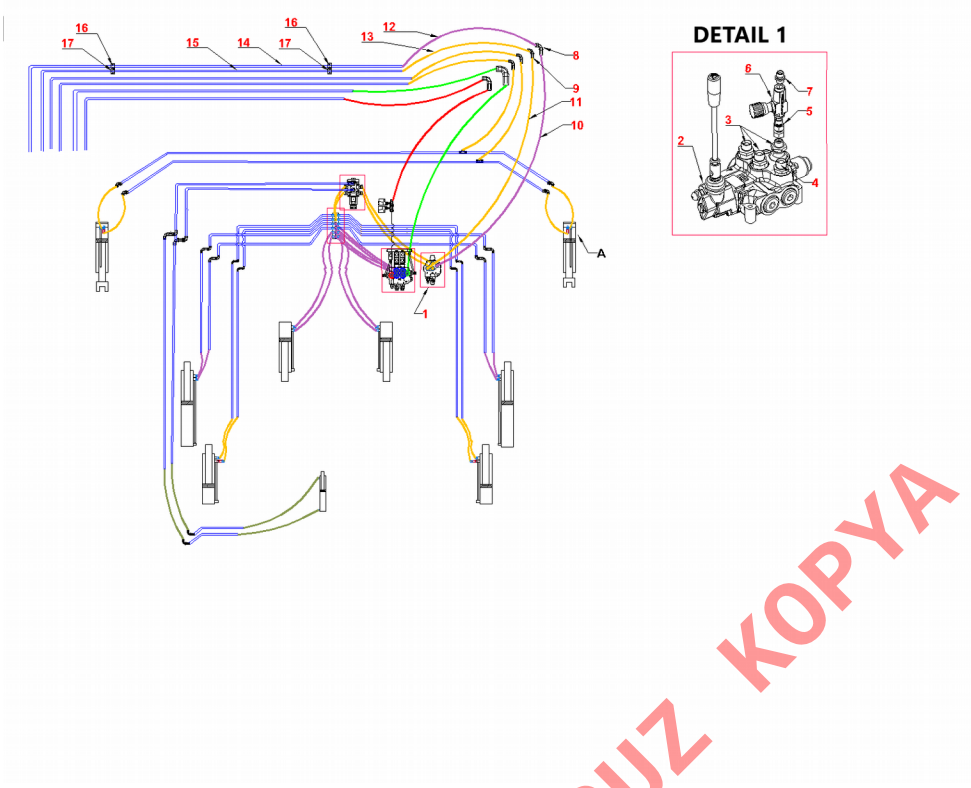

Image 66: Body Tandem Hydraulic Schema

KONTROLSUZ KOPYA

Ref	Part Code	Explanations	Op	Ad
1	Please Consult with After Sales	ORV 400 Installation of Tandem 2-way Hydraulic Control Installation	D	1
2	Please Consult with After Sales	One Way Control Valve	D	1
3	050400180007	Hydraulic Couplings / Bsp - Metric / Flat Couplings / 1/2 " 16S M24x1.5	O	3
4	050400180005	Hydraulic Couplings / Bsp - Metric / Flat Coupling / 1/2 " 16S M24x1.5	O	1
5	050400190001	Hydraulic Couplings / BSP - Metric / Reverse Couplings - with Pin / 3/8 " 12S M20x1.5	O	1
6	050300830006	Valves / Speed Control Valves / 3/8"	O	1
7	050400180017	Hydraulic Couplings / BSP - Metric / Flat Coupling / 3/8" 12S M20x1.5	O	1
8	050400560001	Hydraulic Fittings / Metric / Elbows / Pipe Connection Wall Transition / S Type / M20x1.5 12S	O	1
9	050400560004	Hydraulic Couplings / Metric / Elbows / Pipe Connection Baffle / S Type / M24x1.5 16S	O	1
10	ORVALLHTMSAA020	1\2" R2 Tailgate with Tandem Pump's Valve Connection Hose	O	1
11	ORVALLHTMSAA021	3\8" R2 Tailgate with Tandem Pump's Valve Connection Hose	O	1
12	ORVALLHTMSAA004	1\2" R2 Tailgate with Tandem Pump's Valve Connection Hose	O	1

13	ORVALLHTMSAA005	3\8" R2 Tailgate with Tandem Pump's Valve Connection Hose	O	1
14	ORV400HTMRAA052	ORV 413 Tandem Body Top Tank Line Hydraulic Pipe Installation	O	1
	ORV400HTMRAA053	ORV 414 Tandem Body Top Tank Line Hydraulic Pipe Installation		
	ORV400HTMRAA054	ORV 415 Tandem Body Top Tank Line Hydraulic Pipe Installation		
	ORV400HTMRAA055	ORV 416 Tandem Body Top Tank Line Hydraulic Pipe Installation		
	ORV400HTMRAA056	ORV 417 Tandem Body Top Tank Line Hydraulic Pipe Installation		
	ORV400HTMRAA057	ORV 418 Tandem Body Top Tank Line Hydraulic Pipe Installation		
	ORV400HTMRAA058	ORV 419 Tandem Body Top Tank Line Hydraulic Pipe Installation		
	ORV400HTMRAA059	ORV 420 Tandem Body Top Tank Line Hydraulic Pipe Installation		
	ORV400HTMRAA060	ORV 421 Tandem Body Top Tank Line Hydraulic Pipe Installation		
	ORV400HTMRAA061	ORV 422 Tandem Body Top Tank Line Hydraulic Pipe Installation		
	ORV400HTMRAA062	ORV 423 Tandem Body Top Tank Line Hydraulic Pipe Installation		
	ORV400HTMRAA063	ORV 424 Tandem Body Top Tank Line Hydraulic Pipe Installation		
	ORV400HTMRAA064	ORV 425 Tandem Body Top Tank Line Hydraulic Pipe Installation		
	ORV400HTMRAA065	ORV 426 Tandem Body Top Tank Line Hydraulic Pipe Installation		
	ORV400HTMRAA066	ORV 427 Tandem Body Top Tank Line Hydraulic Pipe Installation		
	ORV400HTMRAA067	ORV 428 Tandem Body Top Tank Line Hydraulic Pipe Installation		
	ORV400HTMRAA068	ORV 429 Tandem Body Top Tank Line Hydraulic Pipe Installation		
	ORV300HTMRAA001	ORV 310 Tandem Body Top Tank Line Hydraulic Pipe Installation		
	ORV300HTMRAA002	ORV 311 Tandem Body Top Tank Line Hydraulic Pipe Installation		

KONTROLSUZ KOPYA

	ORV300HTMRAA003	ORV 312 Tandem Body Top Tank Line Hydraulic Pipe Installation		
	ORV300HTMRAA004	ORV 313 Tandem Body Top Tank Line Hydraulic Pipe Installation		
	ORV300HTMRAA005	ORV 314 Tandem Body Top Tank Line Hydraulic Pipe Installation		
	ORV300HTMRAA006	ORV 315 Tandem Body Top Tank Line Hydraulic Pipe Installation		
	ORV300HTMRAA007	ORV 316 Tandem Body Top Tank Line Hydraulic Pipe Installation		
	ORV200HTMRAA029	ORV 205 Tandem Upper Body Tank Line Hoses		
	ORV200HTMRAA019	ORV 206 Tandem Upper Body Tank Line Hoses		
	ORV200HTMRAA020	ORV 207 Tandem Upper Body Tank Line Hoses		
	ORV200HTMRAA021	ORV 208 Tandem Upper Body Tank Line Hoses		
	ORV200HTMRAA022	ORV 209 Tandem Upper Body Tank Line Hoses		
15	ORV200HTMRAA023	ORV 210 Tandem Upper Body Tank Line Hoses		
	ORV400HTMRAA069	ORV 413 Tandem Upper Body Pressure Line Hydraulic Pipe Installation	O	1
	ORV400HTMRAA070	ORV 414 Tandem Upper Body Pressure Line Hydraulic Pipe Installation		
	ORV400HTMRAA071	ORV 415 Tandem Upper Body Pressure Line Hydraulic Pipe Installation		
	ORV400HTMRAA072	ORV 416 Tandem Upper Body Pressure Line Hydraulic Pipe Installation		
	ORV400HTMRAA073	ORV 417 Tandem Upper Body Pressure Line Hydraulic Pipe Installation		
	ORV400HTMRAA074	ORV 418 Tandem Upper Body Pressure Line Hydraulic Pipe Installation		
	ORV400HTMRAA075	ORV 419 Tandem Upper Body Pressure Line Hydraulic Pipe Installation		

KONTROLSUZ KOPYA

	ORV400HTMRAA076	ORV 420 Tandem Upper Body Pressure Line Hydraulic Pipe Installation		
	ORV400HTMRAA077	ORV 421 Tandem Upper Body Pressure Line Hydraulic Pipe Installation		
	ORV400HTMRAA078	ORV 422 Tandem Upper Body Pressure Line Hydraulic Pipe Installation		
	ORV400HTMRAA079	ORV 423 Tandem Upper Body Pressure Line Hydraulic Pipe Installation		
	ORV400HTMRAA080	ORV 424 Tandem Upper Body Pressure Line Hydraulic Pipe Installation		
	ORV400HTMRAA081	ORV 425 Tandem Upper Body Pressure Line Hydraulic Pipe Installation		
	ORV400HTMRAA082	ORV 426 Tandem Upper Body Pressure Line Hydraulic Pipe Installation		
	ORV400HTMRAA083	ORV 427 Tandem Upper Body Pressure Line Hydraulic Pipe Installation		
	ORV400HTMRAA084	ORV 428 Tandem Upper Body Pressure Line Hydraulic Pipe Installation		
	ORV400HTMRAA085	ORV 429 Tandem Upper Body Pressure Line Hydraulic Pipe Installation		
	ORV300HTMRAA008	ORV 310 Tandem Upper Body Pressure Line Hydraulic Pipe Installation		
	ORV300HTMRAA009	ORV 311 Tandem Upper Body Pressure Line Hydraulic Pipe Installation		
	ORV300HTMRAA010	ORV 312 Tandem Upper Body Pressure Line Hydraulic Pipe Installation		
	ORV300HTMRAA011	ORV 313 Tandem Upper Body Pressure Line Hydraulic Pipe		

KONTROLSUZ KOPYA

		Installation		
	ORV300HTMRAA012	ORV 314 Tandem Upper Body Pressure Line Hydraulic Pipe Installation		
	ORV300HTMRAA013	ORV 315 Tandem Upper Body Pressure Line Hydraulic Pipe Installation		
	ORV300HTMRAA014	ORV 316 Tandem Upper Body Pressure Line Hydraulic Pipe Installation		
	ORV200HTMRAA030	ORV 205 Tandem Upper Body Pressure Line Hydraulic Pipe Installation		
	ORV200HTMRAA024	ORV 206 Tandem Upper Body Pressure Line Pipes		
	ORV200HTMRAA025	ORV 207 Tandem Upper Body Pressure Line Pipes		
	ORV200HTMRAA026	ORV 208 Tandem Upper Body Pressure Line Pipes		
	ORV200HTMRAA027	ORV 209 Tandem Upper Body Pressure Line Pipes		
	ORV200HTMRAA028	ORV 210 Tandem Upper Body Pressure Line Pipes		
16	101500860020	Clamps / Plastic / Pipe Clamps / Ø12 Double Fish Plate M6x35 mm	O	2
17	101500860021	Clamps / Plastic / Pipe Clamps / Ø16 mm Double Fish Plate M6x40 mm	O	2

Table 37: Body Tandem Hydraulic Chart

KONTROLSÜZ KOPYA

6.1.20.6 Bin-Lifter Hydraulic Connection

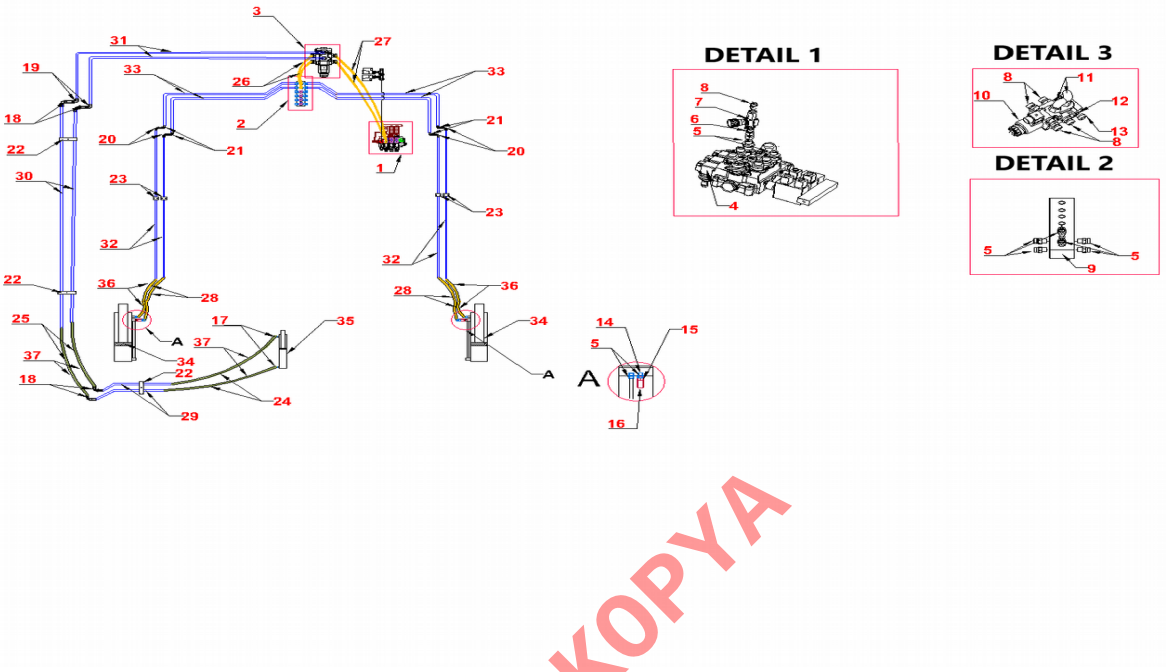

Image 67:Assembly of Bin-Lifter Hydraulic Connection

KONTROLSUZ KOPYA

Ref	Part Code	Explanation	Optional	Qty
1	Please contact with After Sales	Optional Bin-Lifter Command Arm Assembling	D	1
2	ORVALLHDMSAA001	w/out Collector Assembling	S	1
	ORVALLHDMSAA002	With Bin-Lifter Collector Assembling	S	1
3	ORV400HDMSAA035	Bin-Lifter Locking Valve Assembling	S	1
4	Please contact with After Sales	Optional Bin-Lifter Command Arm	D	1
5	050400180007	Hydraulic Couplings / Bsp - Metric / Flat Couplings / 1/2 " 16S M20x1.5	S	12
6	050400190001	Hydraulic Couplings / Bsp - Metric / Reverse Couplings - Pins / 3/8 " 12S M20x1.5	S	1
7	050300830006	Valves / Speed Control Valves / 3/8 " Traction	S	1
8	050400180017	Hydraulic Couplings / Bsp - Metric / Flat Couplings / 3/8" 12S M20x1.5	S	5
9	ORVALLHDPSAA017	Collector	S	1
10	050300150027	Valves / Solenoid Valves / DVS6 3/8" 50 L 315 Bar 24 V Control Valve	S	1
	050300150032	Valves / Solenoid Valves / 3/8" 12 V Control Valve		
11	050400990003	Hydraulic Couplings / BSP - Metric / Adjusting Elbow / 3/8" 10L M16x1.5	S	2
12	101100690003	1\4" Super Washer	S	1
13	050400290002	1\4" Hydraulic Blind Flange	S	1

14	101100700002	Washers and Stamps / Copper Washer / 1/2"	S	2
15	050301300003	Valves / Hose Burst Valve1/2"Cartridge	S	2
16	050301300007	Valves / Hose Burst Valve /1/2" Sleeve	S	2
17	050400180013	Hydraulic Couplings / BSP - Metric / Flat Coupling / 3/8 " 10L M16X1.5	S	2
18	050400570002	Hydraulic Couplings / Metric / Elbows / Pipe Connection Wall Switch / L Type / M16x1.5 10L	S	4
19	050400590002	Hydraulic Couplings./ Metric / Elbows / Pipe Connection Reverse Dir. Pin/L Type/M16x1.5 10L M16x1.5	S	2
20	050400560001	Hydraulic Couplings / Metric / Elbows / Pipe Connection Wall Transition / S Type / M20x1.5 12S	O	4
21	050401690003	Hydraulic Couplings / BSP-Metric / Manometer Reverse Union / 1/4" 12S M20x1.5	O	4
22	101501210008	Clips / Plastic/ Twin Pipe Clips / Ø10 Mm Double Fish Plate	O	3
23	101500860012	Clips / Plastic/ Twin Pipe Clips / Ø12 Double Fish Plate	O	4
24	ORV400HTMSAA011	5/16" Bin-Lifter Hydraulic Hose Assembling (ORV 400)	O	2
	ORVALLHTMSAA014	5/16" Bin-Lifter Hydraulic Hose Assembling (ORV 300-200)		
25	ORV400HTMSAA012	5/16" Bin-Lifter Hydraulic Hose Assembling	O	2
	ORV300HTMSAA009	5/16" Bin-Lifter Hydraulic Hose Assembling		
	ORV200HTMSAA009	5/16 " Bin-Lifter Hydraulic Hose Assembling		
26	ORV400HTMSAA013	3/8 " Bin-Lifter Hydraulic Hose Assembling (ORV 400)	O	2
	ORVALLHTMSAA012	3/8 " Bin-Lifter Hydraulic Hose Assembling (ORV300-200)		
27	ORV400HTMSAA014	3/8 " Bin-Lifter Hydraulic Hose Assembling (ORV 400)	O	2
	ORVALLHTMSAA013	3/8 " Bin-Lifter Hydraulic Hose Assembling (ORV300-200)		
28	ORV400HTMSAA015	3/8 " Bin-Lifter Hydraulic Hose Assembling (ORV400)	O	4
	ORVALLHTMSAA015	3/8 " Bin-Lifter Hydraulic Hose Assembling (ORV300-200)		
29	ORV400HTMSAA016	Ø 10 Bin-Lifter Locking Hydraulic Installation Pipe Assembling	O	2
	ORV300HTMSAA010	Ø 10 Bin-Lifter Locking Hydraulic Installation Pipe Assembling		
	ORV200HTMSAA010	Ø 10 Bin-Lifter Locking Hydraulic Installation Pipe Assembling		

KONTROLSÜZ KOPYA

30	ORV400HTMSAA017	Ø 10 Bin-Lifter Locking Hydraulic Installation Pipe Assembling	O	2
	ORV300HTMSAA011 ORV300HTMSAA012	Ø 10 Bin-Lifter Locking Hydraulic Installation Pipe Assembling Ø 10 Bin-Lifter Locking Hydraulic Installation Pipe Assembling		
	ORV200HTMSAA011	Ø 10 Bin-Lifter Locking Hydraulic Installation Pipe Assembling		
31	ORV400HTMSAA018	Ø 10 Bin-Lifter Locking Hydraulic Installation Pipe Assembling	O	2
	ORV300HTMSAA013	Ø 10 Bin-Lifter Locking Hydraulic Installation Pipe Assembling		
	ORV200HTMSAA012	Ø 10 Bin-Lifter Locking Hydraulic Installation Pipe Assembling		
32	ORV400HTMSAA019	Ø 12 Bin-Lifter Hydraulic Hose Assembling	O	4
	ORV300HTMSAA014	Ø 12 Bin-Lifter Hydraulic Hose Assembling		
	ORV200HTMSAA013	Ø 12 Bin-Lifter Hydraulic Hose Assembling		
33	ORV400HTMSAA020	Ø 12 Bin-Lifter Hydraulic Hose Assembling	O	4
	ORV300HTMSAA015	Ø 12 Bin-Lifter Hydraulic Hose Assembling		
	ORV200HTMSAA014	Ø 12 Bin-Lifter Hydraulic Hose Assembling		
34	ORVALLHDPSAA021	ORV Series Bin-Lifter Piston	O	2
35	TMOALLHDPSAA002	Bin-Lifter Locking Piston	O	1
36	052001250020	Hydraulic Hoses / 20 – 25 Spiral Hydraulic Hose Protector	O	2
37	052001250019	Hydraulic Hoses / 16 -20 Spiral Hydraulic Hose Protector	O	2

Table 38: Bin-Lifter Chart

KONTROLSUZ KOPYA

6.1.20.7 Tandem Oil Tank Hydraulic Connection

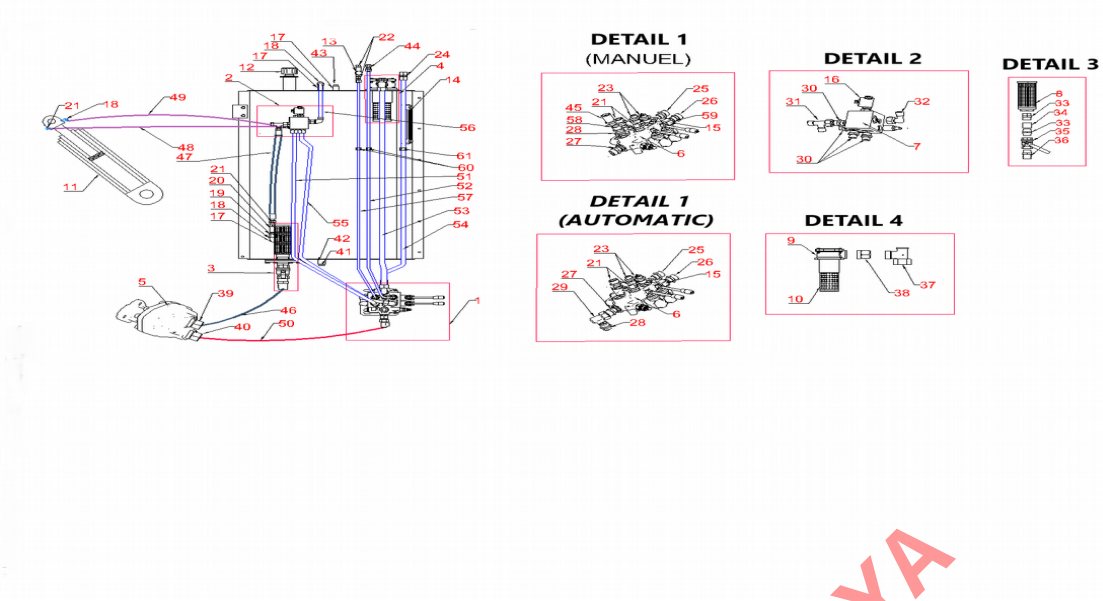

Image 68:Assembly of Oil Tank Hydraulic Connection

KONTROLSUZ KOPYA

Ref	Part Code	Explanation	Op	Qty
1	Contact with After Sales	ORV 400 Automatic Control Lever Installation	S	1
2	ORV400HDMSAA114	Telescopic Discharge Block Installation	S	1
3	ORV400HDMSAA116	Suction Filter Installation	S	1
4	ORV400HDMSAA117	Return Filter Installation	S	1
5	Contact with After Sales	Pump	D	1
6	050301550011 - 050301550014	Valve / Direction Control Vale / 2 way Manuel) Valve / Direction Control Vale / 2 way Manuel) Eho	S	1 1
7	050800650002	Blocks / Discharging Block (Poppet)	S	1
8	050200060007	Hydraulic Filters / Suction Line Filter / (ORV 300-400)	S	1
	050200060001	Hydraulic Filters / Suction Line Filter (ORV 200)	S	1
9	050200070008	Hydraulic Filters / Return Line Filter./ Return Filter	S	1
10	050200070007	Hydraulic Filters / Return Line Filter / Return Filter /	S	1
11	Look for Piston Section	Telescopic Piston	D	1
12	100700540009	Cover Lock Accessories / Tank Covers / Chained Screw Tank Cover	S	1
13	050300830006	Valve / Speed Control Valve	S	1
14	050500160001	Indicators / Oil Level Indicator/ 254 Mm Lev.	S	1
15	051901240007	Carry Over	S	1
16	050300150023	Valve/ Selenoide Val./ 1/2"Poppet Valve Katric+Bobbin	S	1
17	100502070004	Carry Over / / Weld Carry over / 1/2" Hydraulic Welding Carry over	S	3

18	050400990007	Hyd. Rec. / Bsp - Metric / Retained Elbows / 1/2" 16S M24x1.5	S	3
19	050400190004	Hyd. Rec. / Bsp - Metric / / Reverse Couplings - Pins / 1/2" 16S M24x1.5	S	1
20	050300110002	Valves / Check Valves / 1/2 " with Spring	S	1
21	050400180005	Hydraulic Couplings / Bsp - Metric / Flat Coupling / 1/2 " 16S M24x1.5	S	4
22	050400180017	Hydraulic Couplings / Bsp - Metric / Flat Coupling / 3/8" 12S M20x1.5	S	2
23	050400180007	Hydraulic Couplings / Bsp - Metric / Flat Coupling / 1/2" 12S M20x1.5	S	2
24	050400750002	Hyd. Rec. / Metric - Metric / Flat Connection Nipple / S Type /20S M30x2	S	1
25	050400180011	Hydraulic Couplings / Bsp - Metric / Flat Coupling / 3/4" 25S M36x2	S	1
26	050400180001	Hydraulic Couplings / Bsp - Metric / Flat Coupling / 3/4" 20S M36x2	S	1
27	050400180031	Hydraulic Couplings / Bsp - Metric / Flat Coupling / 1/2" 20S M30x2	S	1
28	050400300001	Hyd. Coupling / Man.Coup. / Manometer Connection Coupling Bsp / 1/4" M16x1.5 (Automatic)	O	1
29	050400820001	Hyd.Coup./ Mt./ Side Arm T Coupling / Optional / 1/4" 20S M30x1.5	O	1
30	050400180002	Hydraulic Couplings / Bsp - Metric / Straight Couplings / 3/4 " 16S M24x1.5	S	4
31	050400270001	Hydraulic Couplings / Metric / Side Leg T Fittings / Ø 16S M24x1.5	S	1
32	050400990002	Hydraulic Couplings / Bsp - Metric / Retained Elbows / 3/4" 16S M24x1.5	S	1
33	050100480006	WATER INSTALLATION FITTINGS / GALVANIZED / NIPPLE / 2 (ORV 300-400 Series)	S	2
	050100480003	Water Installation Couplings / Nipple / 1 1/2" Galvanis (ORV 200)	S	2
34	100500510010	Couplings / Black/ Full/ 2 " (ORV 400 -300)	S	1
	100500510002	Couplings / Black/ Full/ 1 1/2" (ORV-200)	S	1
35	101000620011	Ball Valves / Threaded 2 Piece / PN10 / 2" DN25 (400-300)	S	1
	101000620002	Ball Valves / Threaded 2 Piece / PN10 / 1 1/2 " DN25 (200)	S	1
36	050101130010	Plumbing Couplings / Brass / Hose Crimp / 2" Ø50 (400-300)	S	1
	050101130008	Plumbing Couplings / Brass / Hose Crimp / 1 1/2" Ø38(200)	S	1
37	050401520001	Hydraulic Coupling / Mt. / Middle Leg Te Coup. / Pin / Ø 25S M36x2	S	1
38	050400180024	Hydraulic Coupling / Bsp - Metric / Flat Coupling/ 1 1/4" 25S M36x2	S	1

KONTROLSUZ KOPYA

39	050401600001	Hyd. Rec./ Pump Suction Coupling / 1" 51 Mm Pump Suction L (ORV 400-300)	S	1
	050401600002	Hydraulic Coupling / Pump Suction Coupling / 1" 38 mm Pump Suction L (ORV 200)		
40	050400180034	Hydraulic Coupling / Bsp - Metric / Flat Coupling / 1" 20S M30x2	S	1
41	050400290005	Hydraulic Coupling / Metric / Blind Flanges / 3/4"	S	1
42	100502070001	Sleeves / Welding Sleeves / 3/4" Hydraulic Welding Sleeves	S	1
43	050400290001	Hydraulic Coupling / Metric / Blind Flanges / 1/2"	S	1
44	050400750001	Hyd. Rec. / Mt. - Mt. / Pipe Con. Nipple / S Type / 12S M20x1.5	S	1
45	050400340004	Hydraulic Reduction 1/2" X 1/4"	S	1
46	ORVALLHTPSAA001	2" Cloth Suction Hose (ORV 400 -300)	S	1
	ORV200HTPSAA001	3/2" Cloth Suction Hose (ORV – 200)		
47	ORV400HTMSAA001	1/2" R2 Oil Tank Hydraulic Hose Installation	S	1
	ORV300HTMSAA001	1/2 R2 Oil Tank Hydraulic Hose Installation	S	1
	ORV200HTMSAA001	1/2 R2 Oil Tank Hydraulic Hose Installation	S	1
48	ORVALLHTMSAA001	1/2 R2 Telescope Piston Hydraulic Hose Installation	S	1
49	ORVALLHTMSAA002	1/2 R2 Telescope Piston Hydraulic Hose Installation	S	1
50	ORVALLHTMSAA003	3/4 R2 Pressure Line Hydraulic Hose Installation	S	1
51	ORV400HTMSAA002	Ø16 Oil Tank Hydraulic Line Installation	S	1
	ORV300HTMSAA002	Ø16 Oil Tank Hydraulic Line Installation	S	1
	ORV200HTMSAA002	Ø16 Oil Tank Hydraulic Line Installation	S	1
52	ORV400HTMSAA003	Ø12 Oil Tank Hydraulic Installation Tailgate Line Pipe Installation	S	1
	ORV300HTMSAA003	Ø12 Oil Tank Hydraulic Installation Tailgate Line Pipe Installation	S	1
	ORV200HTMSAA003	Ø12 Oil Tank Hydraulic Installation Tailgate Line Pipe Installation	S	1
53	ORV400HTMSAA004	Ø25 Oil Tank Hydraulic Installation Tailgate Line Pipe Installation	S	1
	ORV300HTMSAA004	Ø25 Oil Tank Hydraulic Installation Tailgate Line Pipe Installation	S	1
	ORV200HTMSAA005	Ø25 Oil Tank Hydraulic Installation Tailgate Line Pipe Installation	S	1
54	ORV400HTMSAA005	Ø20 Oil Tank Hydraulic Installation Tailgate Line Pipe Installation	S	1

KONTROLSÜZ KOPYA

	ORV300HTMSAA005	Ø20 Oil Tank Hydraulic Installation Tailgate Line Pipe Installation	S	1
	ORV200HTMSAA006	Ø20 Oil Tank Hydraulic Installation Tailgate Line Pipe Installation	S	1
55	ORV400HTMSAA006	Ø16 Oil Tank Hydraulic Installation Pipe Installation	S	1
	ORV300HTMSAA006	Ø16 Oil Tank Hydraulic Installation Pipe Installation	S	1
	ORV200HTMSAA007	Ø16 Oil Tank Hydraulic Installation Pipe Installation	S	1
56	ORV400HTMSAA007	Ø16 Oil Tank Hydraulic Installation Pipe Installation	S	1
	ORV300HTMSAA007	Ø16 Oil Tank Hydraulic Installation Pipe Installation	S	1
	ORV200HTMSAA008	Ø16 Oil Tank Hydraulic Installation Pipe Installation	S	1
57	ORV400HTMSAA008	Ø12 Oil Tank Hydraulic Tailgate Line Plumbing Pipe Installation	S	1
	ORV300HTMSAA008	Ø12 Oil Tank Hydraulic Tailgate Line Plumbing Pipe Installation	S	
	ORV200HTMSAA008	Ø12 Oil Tank Hydraulic Tailgate Line Plumbing Pipe Installation	S	
58	101100690002	Stamp and Washers / Super Washer / 1/2"	S	1
59	101100690004	Stamp and Washers / Super Washer / 3/4"	S	1
60	101500860020	Clamp / Plastic / Pipe Clamp / Ø12 mm M6x35 mm	S	2
61	101500860022	Clamp / Plastic / Pipe Clamp / Ø20 mm M6x45 mm	S	1

Table 39: Oil Tank

KONTROLSUZ KOPYA

6.1.20.8 Tandem Oil Tank Hydraulic Connection

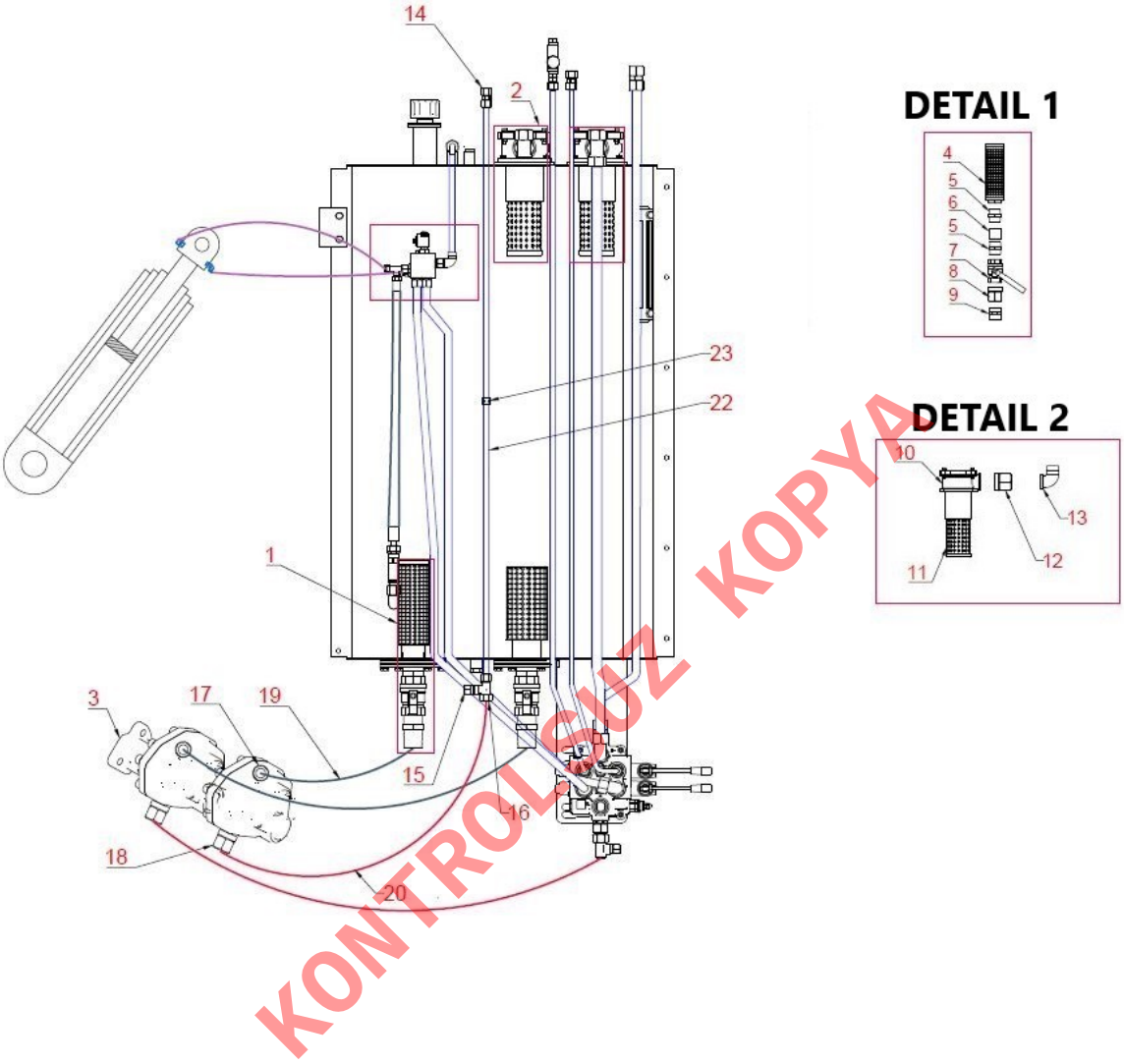

KONTROLSÜZ KOPYA

Ref	Part Code	Explanation	Op	Qty
1	ORVALLHDMSAA006	Tandem Function Filter Assembling	1	S
2	ORVALLHDMSAA007	Tandem Function Filter Assembling -2	1	S
3	Contact with After Sales	Tandem Pump	1	D
4	050200060001	Hydraulic Filters / Suction Line Filter	1	S
5	050100480003	Plumbing Fittings / Galvanized / Nipple / 1 1/2"	2	S
6	100500510002	Sleeves / Welding Sleeve / 1 1/2" Hydraulic Welding Sleeve	1	S
7	101000620002	Ball Valves / Gear 2 Pieces / PN10 / 1 1/2 " DN25	1	S
8	050400340017	Hydraulic Couplings / Bsp / Reduction / 1 1/4" - 1 1/2"	1	S
9	050400180024	Hydraulic Couplings / Bsp - Metric / Flat Couplings / 1 1/4" 25S M36x2	1	S

10	050200070008	Hydraulic Filters / Return Line Filter	1	S
11	050200070007	Hydraulic Filters / Return Line Filter / Return Line Connection Part	1	S
12	050400340014	Hydraulic Couplings / BSP / Reduction / 1 1/4" - 3/4"	1	S
13	050400990002	Hydraulic Couplings / BSP - Metric / Contra Elbows / 3/4" 16S M24x1.5	1	S
14	050400750001	Hydraulic Couplings / Metric - Metric / Middle Nipple / S Type / M20x1.5 12S M20x1.5	1	S
15	050400300001	Hydraulic Couplings / Manometer Couplings/ Manometer Connection Couplings BSP / 1/4" M16x1.5	1	S
16	050400820004	Hydraulic Couplings / Metric / Side Leg Coup. 1/4" 12S Optional Reverse	1	S
17	050400180011	Hydraulic Couplings / BSP / Flat Coupling / 3/4" 25S M36x2	1	S
18	050400180007	Hydraulic Couplings / BSP - Metric / Flat Coupling / 1/2" 12S M20x1.5	1	S
19	ORVALLHTMSAA008	1" R1 Function Hose	1	S
20	ORV200HTPSAA022	1 1/2 " Cloth Function Hose	1	S
	ORVALLHTPSAA002	2" Cloth Function Hose		
21	ORVALLHTMSAA009	3/8" R2 Hose Male Elbow	1	S
22	ORV200HTMSAA015	Ø12 *Tandem Oil Tank Hydraulic Connection*	1	S
	ORV300HTMSAA016	Ø12 *Tandem Oil Tank Hydraulic Connection*		
	ORV400HTMSAA031	Ø12 *Tandem Oil Tank Hydraulic Line Connection*		
23	101500860020	Clamps / Plastic / Clamps / Ø12 mm Double Laminated M6x35 mm Long Bolt	1	S

KONTROLSÜZ KOPYA

6.1.20.9 Skiploader Hydraulic Connection

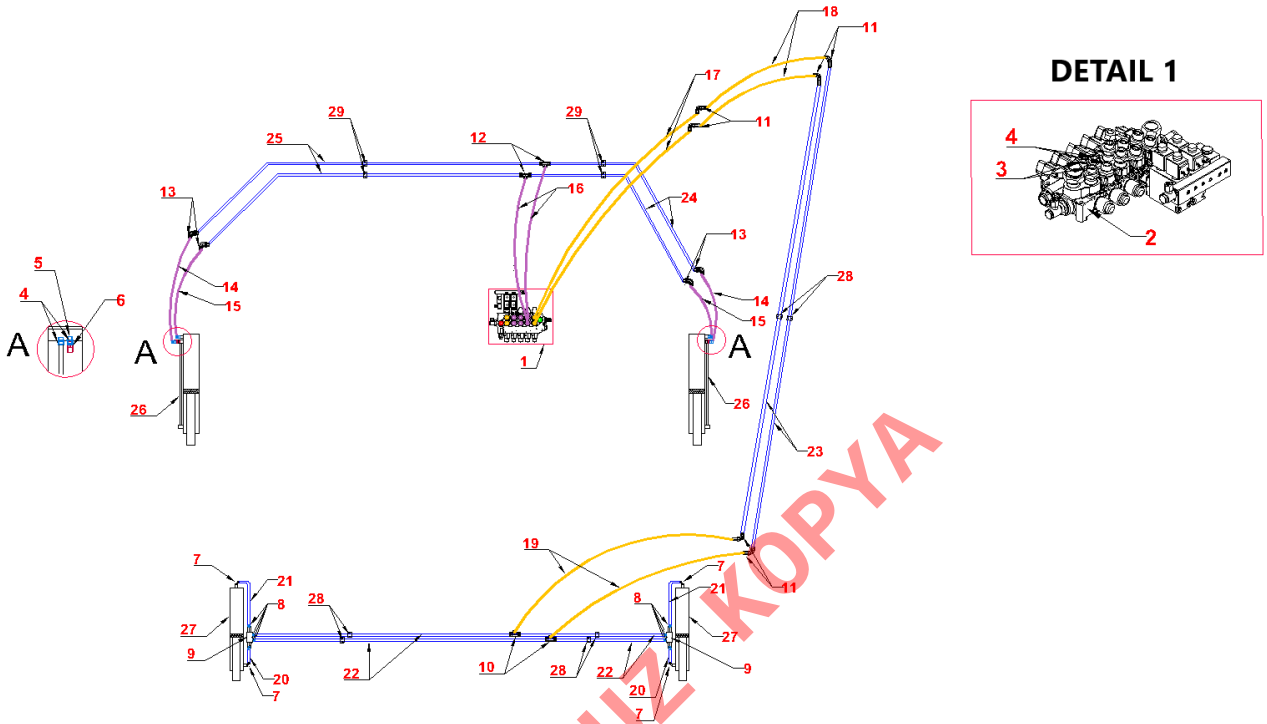

KONTROLSUZ KOPYA

Image 69 :Skiploader Hydraulic Schema

Ref	Part Code	Explanation	Op	Qty
1	Contact with After Sales	Skiploader Optional Command Arm Assembling	D	1
2	Contact with After Sales	Skiploader Optional Way Control Valve	D	1
3	050400180007	Hydraulic Coupling / BSP - Metric / Flat Coupling/ 1/2" 12S M20x1.5	O	2
4	050400180005	Hid. Coup. / Bsp - Metric/ Flat Coupling / 1/2" 16S M24x1.5	O	6
5	101100700002	Stamps and Washers / Stamp	O	2
6	050300110001	Valve / Check Valves / 1/2" Hose	O	2
7	050400550002	Hydraulic Coupling / Bsp / Elbows / Female Elbow / 3/8"	O	4
8	050400180017	Hyd. Coup./Bsp-Mt./ Flat Coupling / 3/8" 12S M20x1.5	O	8
9	050300660004	Valves/Locking Valves / 3/8" Locking Valves	O	2

10	050400260001	Hydraulic Coup/ Metric / T Coupling / 12S M20x1.5	O	2
11	050400560001	Hid. Rec./ Mt./ Dirs./ Pipe Connection. Curtain Crossing /SOType/ 12S M20x1.5	O	6
12	050400260007	Hyd. Coup / Metric / T Coupling / 16S M24x1.5	O	2
13	050400560004	Hyd. Coup./Mt./Elb./Pipe Conn. Curtain Slide/S Type/ 16S M24x1.5	O	4
14	ORV400HTMSAA032	1/2 R2 Skiploader Arms Piston Hose	O	2
15	ORV400HTMSAA033	1/2 R2 Skiploader Arms Piston Hose	O	2
16	ORV400HTMSAA034	1/2 R2 Skiploader Arms Command Arm Hose	O	2
17	ORV400HTMSAA035	3/8 R2 Skiploader Stabilizer Command Arm Hose	O	2
18	ORV400HTMSAA036	3/8 R2 Skiploader Stabilizer Tailgate Upper Hose	O	2
19	ORV400HTMSAA037	3/8 R2 Skiploader Stabilizer Piston Hose	O	2
20	ORV400HTMSAA038	Ø 12 Skiploader Stabilizer Hydraulic Line Pipe Assembling	O	2
21	ORV400HTMSAA039	Ø 12 Skiploader Stabilizer Hydraulic Line Pipe Assembling	O	2
22	ORV400HTMSAA040	Ø 12 Skiploader Stabilizer Hydraulic Line Pipe Assembling	O	4
23	ORV400HTMSAA041	Ø 12 Skiploader Stabilizer Hydraulic Line Pipe Assembling	O	2
24	ORV400HTMSAA042	Ø 16 Skiploader Stabilizer Hydraulic Line Pipe Assembling	O	2
25	ORV400HTMSAA043	Ø 16 Skiploader Stabilizer Hydraulic Line Pipe Assembling	O	2
26	ORV400HDPSAA112	Skiploader Arm Piston	O	2
27	ORV400HDPSAA114	Skiploader Stabilizer Piston	O	2
28	101500860012	Clamp / Plastic / Pipe Clamps / Ø12 Double Plate	O	6
29	101500860015	Clamp / Plastic / Pipe Clamps / Ø16 Double Plate	O	4

Table 40: Skiploader Hydraulic Schema

KONTROLSUZ KOPYA

6.1.20.10 ***Assembly of Pneumatic Connection Used in Container Door Opening and Supporting Assemb***

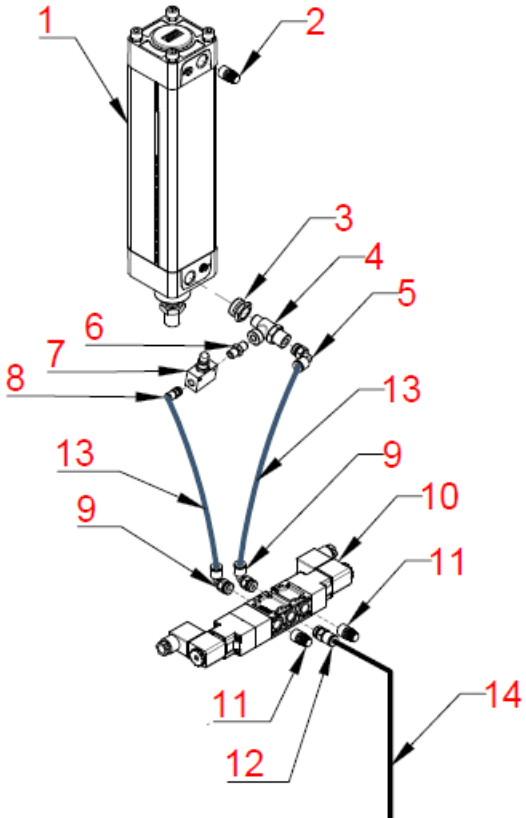

Image 70: Pneumatic Connection of Container Opener and Stopper Bar

Ref	Part Code	Explanation	Op	Qty
1	Contact with After Sales	Tailgate Container Docking Piston		1
	Contact with After Sales	Tailgate Container Gate Open Piston		
2	060700180004	Muffler / 3/8" Sinter	O	1
3	050101470002	Plumbing Fittings / Brass / Reducing / 3/8"x1/2"	O	1
4	050300660005	Valves / Locking Valves / 1/4" Regulating Lock Valve	O	1
5	060300090002	Pneumatic Materials / Pneumatic Couplings / Metric / Elbow / M5x6	O	1
6	060300080006	Pneumatic Fittings / Nipple / 1/8 "-1/8" Brass Nipple	O	1
7	060800210002	Pneumatic Valves / Precision Relief Valves / 1/8"	O	1
8	060300190012	Pneumatic Fittings / Nut Fittings / 1/8 ”4-6 Straight Fittings	O	1
9	060300040007	Pneumatic Fittings / Swiveling Elbow / 1/4 "- 6	O	2
10	060800230005	Pneumatic Valves / Solenoid Valves / 1/4" 24V Pneumatic Valve	O	1
	060800230006	Pneumatic Valves / Solenoid Valves / 1/4" 12V Pneumatic Valve		
11	060700180003	Muffler / BSLM 02 1/4" Plug Muffler	O	2
12	060300060010	Pneumatic Coupling / BSP / Straight Coupling / 1/4"- 6	O	1
13	060500160002	Pneumatic Hoses / 4x6 Europe Type 150cm	O	2
14	060500160002	Pneumatic Hoses / 4x6 Europe Type 1500cm 400 Series	O	1
15	060500160002	Pneumatic Hoses / 4x6 Europe Type 1200cm 300 Series	O	1
16	060500160002	Pneumatic Hoses / 4x6 Europe Type 1000cm 200 Series	O	1

Table 41 : Container cover and Docking parts of Assembling

KONTROLSUZ KOPYA

6.1.20.11 *Electrical Part Installation of the Equipment*

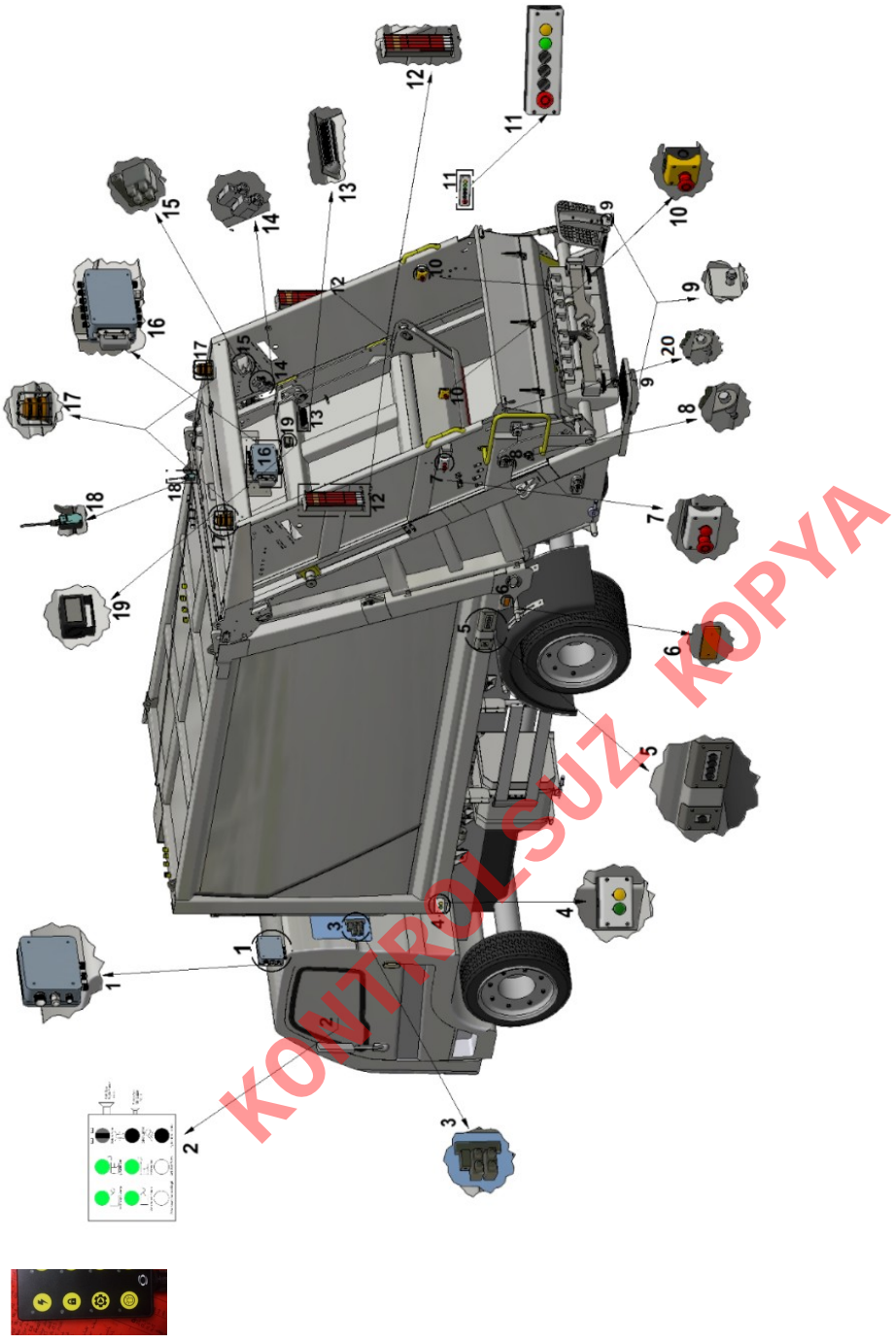

KONTROLSÜZ KOPYA

Image 71: Electrical Part Assemblies of the Equipment

Ref	Part Code	Explanation	Optional	Qty
1	Contact with After Sales	Tailgate Front Panel	D	1
2	ORVALLEEMSAA013	In-Cabin Panel	O	1
3	ORVALLEEMSAA014	Front Valve Bobbins	O	1
4	ORVALLEEMSAA001	2'way Button Box	O	1
5	ORVALLEEMSAA003	Double Hand Command Box	O	1
6	TMOALLEEMSAA001	Side Reflector	S	2
7	ORVALLEEMSAA004	2'way Emergency Stop Box	O	1
8	ORVALLEEMSAA015	Bin-Lifter Sensor	S	1
9	ORVALLEEMSAA016	Step Sensor	O	2
10	ORVALLEEMSAA005	Single Emergency Stop	O	2
11	ORVALLEEMSAA009	6way Button Box	O	1
12	ORVALLEEMSAA017	Light and Head light	S	2
13	TMOALLEEMSAA002	Lightening Light	S	1
14	ORVALLEEMSAA012	Pressure Switch	S	1
15	ORVALLEEMSAA018	Rear Valve Group Bobbin	O	1
16	Consult the SSH Dep.	Tailgate Front Panel	D	1
17	TMOALLEEMSAA003	Bean Light	S	2
18	ORVALLEEMSAA019	Mechanic Limitor Switch	S	1
19	ORVALLEEMSAA020	Camera	O	1
20	ORVALLEEMSAA014	Extension Cover Sensor	O	1

Table 42 Electrical Parts of Equipment

KONTROLSUZ KOPYA

7. CRITICAL SPARE PARTS LIST

ORV CRITICAL SPARE PARTS LIST							
SEQUENCE	CODE	NAME	UNIT	QTY	PICTURE	EXPLANATION	MODIFICATION TIME
1	REFER TO THE PISTONS SECTION	Pistons				.	During the daily periodic maintenance, check and grease the grease fittings. It should be replaced when subjected to physical deformation.
2	REFER TO THE PISTON REPAIR KIT SET..	Piston Repair Kit Set				Used in accordance with Pistons.	Oil leaks should be checked during daily periodic maintenance. Part replacement varies according to working time and conditions.
3	050301550011 Refer to Orakçı Machinery After Sales Department	Valves / Directional Control Valve / 80 Lt / 1/2" Double Manual (+ Carry Over)	PIECE	1		Used if the control lever connected to the oil tank is controlled manually.	It can be replaced depending on the problems that may occur during system operation. The duration varies depending on operating conditions, usage and oil change

KONTROLSUZ KOPYA

4	050301550014 Refer to Orakçı Machinery After Sales Department	Valves / Directional Control Valve /70 Lt / 1/2" Double Eho Akon (+ Carry Over)	PIECE	1		It is used if the control lever connected to the oil tank is an electro-hydraulic controlled equipment.	It can be replaced depending on the problems that may occur during system operation. The duration varies depending on operating conditions, usage and oil change.
5	050301550011 Refer to Orakçı Machinery After Sales Department	Valves / Directional Control Valve // 80 Lt / 1/2" 2 way Manual (+Carry Over)	PIECE	1		Used in manual equipments.	It can be replaced depending on the problems that may occur during system operation. The duration varies depending on operating conditions, usage and oil change.
6	050301550002 Refer to Orakçı Machinery After Sales Department	Valves / Directional Control Valve /80 Lt / 1/2" 2 way Manual	PIECE	1		t is used n ailgates without .nanual Bin-lifter.	It can be replaced depending on the problems that may occur during system operation. The duration varies depending on operating conditions, usage and oil change.
7	050301550005 Refer to Orakçı Machinery After Sales Department	Valves / Directional Control Valve // 80 Lt / 1/2" way Manual	PIECE	1		t is used on ailgate with nanual pparatus.	It can be replaced depending on the problems that may occur during system operation. The duration varies depending on operating conditions, usage and oil change.

KONTROLSUZ KOPYA

8	050301550004 Refer to Orakçı Machinery After Sales Department	Valves / Directional Control Valve // 80 Lt Control Valve / 80 L / 1/2" 3-Way Manual)	PIECE	1		Used in tailgates with semi-automatic Bin-Lifter.	It can be replaced depending on the problems that may occur during system operation. The duration varies depending on operating conditions, usage and oil change
9	050301550010 Refer to Orakçı Machinery After Sales Department	Valves / Directional Control Valve /80 Lt / 1/2" 2'Way Semi-Automatic	PIECE	1		Used in tailgates without semi-automatic Bin-Lifter.	It can be replaced depending on the problems that may occur during system operation. The duration varies depending on operating conditions, usage and oil change.
10	050301550012 Refer to Orakçı Machinery After Sales Department	Valves / Directional Control Valve // 80 Lt / 1/2" 2 way eho (Pressure Control P ve T Connection)	PIECE	1		Automatic , w/out Bin-lifter	It can be changed depending on the problems that may arise in system operation. Its duration varies according to the working conditions, usage and oil change.
11	050301550013 Refer to Orakçı Machinery After Sales Department	Valves / Directional Control Valve / 80 L / 1/2" 3-way eho (AMV 703 Pressure Safety P and T Connectio	PIECE	1		: is used n ailgates vith utomati c Bin-Lifter.	It can be replaced depending on the problems that may occur during system operation. The duration varies depending on operating conditions,

KONTROLSUZ KOPYA

		n)					usage and oil change.
12	050301550008 Refer to Orakçı Machinery After Sales Department	Valves / Directional Control Valve // 80 Lt / 1/2" 4 way eho (2 section electric + 2 section manual)	PIECE	1		It is used in tailgates with automatic bin-lifter and skiploader.	It can be changed depending on the problems that may arise in system operation. Its duration varies according to the working conditions, usage and oil change.
13	050301550007 Refer to Orakçı Machinery After Sales Department	Valves / Directional Control Valve // 80 Lt / 1/2" 5 way eho (2 section electric + 3 section manual)	PIECE	1		It is used in tailgates with automatic and skip loader.	It can be replaced depending on the problems that may occur during system operation. The duration varies depending on operating conditions, usage and oil change
14	050301550012 + 050301430004 Refer to Orakçı Machinery After Sales Department	Valves / Directional Control Valves / 80 L / 1/2" 2-way eho (AMV 702 Pressure Safety Side P and T Connection) + Valves / Directional Control Valves / 50 L/ 1/2"	PIECE	1		It is used in the tailgates with tandem automatic system.	It can be replaced depending on the problems that may occur during system operation. The duration varies depending on operating conditions, usage and oil change.

KONTROLSUZ KOPYA

		1-way Manual					
15	Refer to Orakçı Machinery After Sales Department	Hydraulic Pump	PIECE	1			It can be changed in case of malfunctions due to strain on the system. Its duration varies according to operating conditions, usage, oil change.
16	Refer to Orakçı Machinery After Sales Department	PTO (Power take-off)	PIECE	1		It must be used in accordance with the PTO output of the transmission.	It can be distributed in case of malfunctions that may occur after the system force. Time ; varies according to working conditions, usage, oil change .
17	Refer to Orakçı Machinery After Sales Department	Hydraulic Pump Repair Kit	PIECE	1		Must send chassis information.	It can be distributed in case of malfunctions that may occur after the system force. Time ; varies according to working conditions, usage, oil

KONTROLSUZ KOPYA

							change
18	050800650002	Blocks / Discharge Block (With Poppet)	PIECE	1			It can be distributed in case of malfunctions that may occur after the system force. Time ; varies according to working conditions, usage, oil change
19	050300830006	Valves / Speed Control Valves / 3/8" Regulating	PIECE	2			Can be changed depending on usage. Can be stored as spare parts
20	050200070007	Hydraulic Filters / Return Line Filter / /	PIECE	1			It is replaced every 750 hours or every six months.
21	050200060007	Hydraulic Filters / Suction Line / 2"	PIECE	1		is the spare part for 400-300 series hydraulic and tandem pump.	It is replaced every 1500 hours or every six months.
22	050200060001	Hydraulic Filters / Suction Line 1 1/2"	PIECE	1		It is used 400 and 300 Series Tandem and 200 series all oil tanks.	It is replaced every 1500 hours or every six months.

KONTROLSÜZ KOPYA

23	ORV400AKPSAA072 ORV300AKPSAA049 ORV200AKPSAA025	Tailgate Rubber	PIECE	1	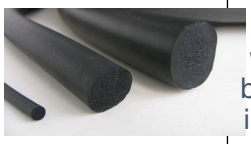	It is replaced when the body loses impermeability.	It is the sealing component between the tailgate and the waste collector. It is replaced after deformation. No periodic maintenance required.
24	ORV400KZTSAA009 ORV300KZTSAA001 ORV200KZTSAA005	Sled Castermid	PIECE	2	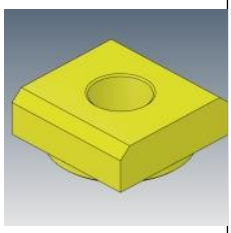		Castermids are subject to constant friction and are replaced if deformed during periodic maintenance. It is checked every 50 hours.
25	ORV400KZTSAA008 ORV300KZTSAA002 ORV200KZTSAA005	Ejector Paddle Castermid	PIECE	2	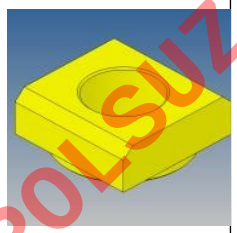		Castermids are subject to constant friction and are replaced if deformed during periodic maintenance. It is checked every 50 hours.
26	ORVALLKZTSAA002	Tailgate Castermid	PIECE	4	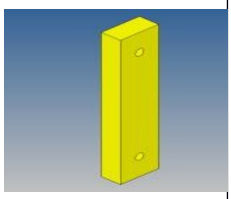		Castermids are subject to constant friction and are replaced if deformed during periodic maintenance. It is checked every 50 hours.
27	ORVALLKZTSAA003	Castermid Ejector Paddle	PIECE	2	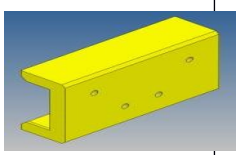		Castermids are subject to constant friction and are replaced if deformed during periodic maintenance. It is checked every 50 hours.

KONTROLSUZ KOPYA

28	100800560008	Ready Bushings / Teflon Bushings	PIECE	4	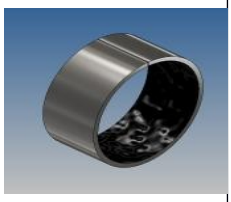		If lubricated, it is used for a long time. It is subject to continuous operation between the blade and the slide. Replaced when worn.
29	050500160001	Gauges / Oil Level Gauges / With Thermometer / 254 mm Level	PIECE	2			Replaced when broken.
30	ORVALLPNPSAA001	Cover Opening-Holding Bin-lifter Piston	PIECE	1	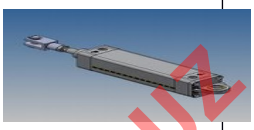		It should be checked during daily periodic maintenance. It should be replaced when subjected to physical deformation.
31	ORVALLPNPSAA002	Cover Opening-Holding Bin-lifter Piston	PIECE	1	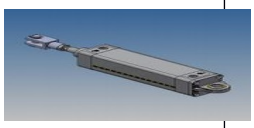		It should be checked during daily periodic maintenance. It should be replaced when subjected to physical deformation.
32	101500860023	Clamps / Plastic / Pipe Clamps / Ø25 mm	PIECE	4		It is used to attach to the equipment based on the diameter of hydraulic pipes.	Replaced when broken.

KONTROLSUZ KOPYA

33	101500860020	Clamps / Plastic / Pipe Clamps / Ø12 mm	PIECE	14		It is used to attach to the equipment based on the diameter of hydraulic pipes..	Replaced when broken..
34	101500860021	Clamps / Plastic / Pipe Clamps / Ø16 mm	PIECE	6		It is used to attach to the equipment based on the diameter of hydraulic pipes.	Replaced when broken.
35	101500860022	Clamps / Plastic / Pipe Clamps / Ø20 mm	PIECE	4		It is used to attach to the equipment based on the diameter of hydraulic pipes.	Replaced when broken.
38	SEE HYDRAULIC AND PNEUMATIC SECTIONS IN THE SPARE PARTS LIST. (Refer to Orakçı Machinery. After Sales Department)	HYDRAULIC AND PNEUMATIC HOSES					It is replaced due to deformation, oil leaks and damage.
39	101201030006	Bearing / Joint Bearings	PIECE	1			When the piston bearings are not lubricated, they deform and break over time. It is replaced due to deformation.

KONTROLSÜZ KOPYA

40	101201030001	Bearing / Joint Bearings	PIECE	6			When the piston bearings are not lubricated, they deform and break over time. It is replaced due to deformation..
41	101201030005	Bearing / Joint Bearings	PIECE	10			When the piston bearings are not lubricated, they deform and break over time. It is replaced due to deformation.
	PLEASE SEE ELECTRIC SECTION. (Refer to Orakçı Machinery After-Sales Department)	ELECTRIC			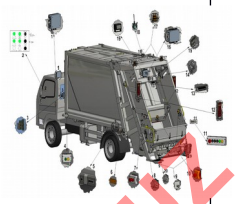		In the event of electrical faults, it is replaced by materials indicated in the electrical section.
42	030100010001	PLC PC HMI and LOGO Module / Siemens	PIECE	1			It is replaced when electrical faults system failure occurs
43	031600160001	Sound Signaling Device Group / Reverse Gear Horn	PIECE	2			Replaced when broken.
44	030200020002	Relay Group / Vehicle Type Mini Relay	PIECE	4			It is replaced when there is an electrical fault.

KONTROLSUZ KOPYA

45	030200020012	Relay Group / Schrack	PIECE	4			It is replaced when there is an electrical fault.
46	051100840006	Mechanic Limit Switches Spring-Driven Metal Body Limit Switch	PIECE	2			It is replaced when there is an electrical fault.
47	031800180001	Contactor Fuse and Switch Group / Glass Fuse	PIECE	2			It is replaced when there is an electrical fault.
48	030900090003	Contactor Fuse and Switch Group / 4 A Glass Fuse	PIECE	1			It is replaced when there is an electrical fault.
49	030900090006	Contactor Fuse and Switch Group / 4 A Glass Fuse	PIECE	2			It is replaced when there is an electrical fault.
50	030900090002	Contactor Fuse and Switch Group / 3 A Glass Fuse	PIECE	5			It is replaced when there is an electrical fault.
51	030300030006	Relay Group / 2 Section Contact Relay	PIECE	5			It is replaced when there is an electrical fault.
52	030200020004	Relay Group / contact relay	PIECE	2			It is replaced when there is an electrical fault.

KONTROLSUZ KOPYA

53	030200020008	Relay group / 24 V DC Slim Relay	PIECE	6			It is replaced when there is an electrical fault.
54	030700070002	Relay Group / Relay	PIECE	1			It is replaced when there is an electrical fault.
55	030700070006	Button and Ignition Group Emergency Stop Button	PIECE	1	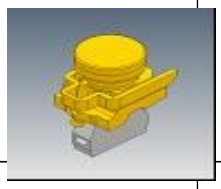		It is replaced when there is an electrical fault.
56	030700070007	Button and Ignition Group Red Emergency Stop Button	PIECE	1	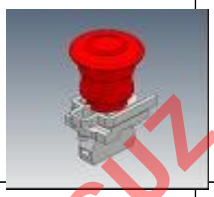		It is replaced when there is an electrical fault.
57	031100110004	Lamp and Headlight Group / Green Signal Lamp with LED	PIECE	1	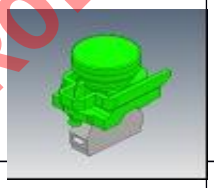		It is replaced when there is an electrical fault.
58	030700070005	Button and Ignition Group Red Emergency 1NC Stop Button	PIECE	1	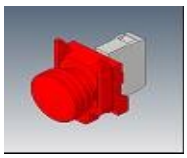		It is replaced when there is an electrical fault.
59	030700070009	Button and Ignition Group / Ignition	PIECE	4			It is replaced when there is an electrical fault.

KONTROLSUZ KOPYA

60	030700070004	Button and Ignition Group Green 1 NO Spring Button	PIECE	1			It is replaced when there is an electrical fault.
61	030700070006	Button and Ignition Group Yellow 1 NO Spring Button	PIECE	1	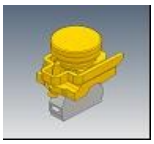		It is replaced when there is an electrical fault.

Table 43: Critical Spare Parts List

KONTROLSUZ KOPYA

8. WARRANTY CONDITIONS of ORAKCI MACHINERY

Product manufacturing types of Orakci Machinery;

D. The product is sub-assembled, hydraulic and electrical installations are prepared externally; no paint treatment is performed (CKD products are also included in this scope.)

Product is sub-assembled, hydraulic and electrical installations of sub-group parts have been made, paint treatment is made, sub-group parts have not been assembled (Products not assembled to the vehicle are included in this scope.)

All sub-assemblies and electrical and hydraulic installations of the product have been made and paint process is completed (Products that have been assembled on the vehicle by Orakçı Machinery are included in this scope.)

For the first product, Orakçı Machinery provides its customers with on-site installation, product installation and user training. This protocol covers the relevant product groups specified in the contract. The first product training activities defined in the Service Management Process are provided by Orakçı Machinery and customer agreement.

KONTROLSUZ KOPYA

Warranty table of Orakçı Machinery.;

Product Warranty Period									
DESCRIPTION	D			M			F		
	Product	Ready Parts	Spare Parts	Product	Ready Parts	Spare Parts	Product	Ready Parts	Spare Parts
MINI DAMPER							1	1	10
TELESKOBIC CRANE AUTO RECOVERY							1	1	10
TELESKOBIC PLATFORM PROJECT				1	1	10	1	1	10
HYDRAULIC COMPRESSED WASTE FRAME PROJECT	1	1	10	1	1	10	1	1	10
VEHICLE MOUNTED VACUUM ROAD CLEANER PROJECT				1	1	10	1	1	10
VEHICLE MOUNTED MINIMATIC							1	1	10

PORTABLE MINIMATIC							1	1	10
VEHICLE MOUNTED VACUUM CLEANING EQUIPMENT PROJECT							1	1	10
WASHING GARBAGE CASE PROJECT							1	1	10
JOINT TELESKOBIC PLATFORM PROJECT				1	1	10	1	1	10
SLIDING PLATFORMS VEHICLE CARRIER / RECOVER							1	1	10
SINGLE ARM LOADER							1	1	10
FIXED PLATFORM							1	1	10
DOUBLE ARM LOADER							1	1	10

KONTROLSUZ KOPYA

	D	M	F
Warranty Date	Bill of Lading / CMR Date	Bill of Lading / CMR Date	Bill of Lading / CMR Date
Warranty Terms	1) Electric, electronic system elements 2) Hydraulics, pneumatics, valves, blocks.	1) Electric, electronic system elements 2) Hydraulics, pneumatics, valves, blocks. 3) All sourced and constructively completed regions .	1)Electric, electronic system components 2) Hydraulics, pneumatics, valves, blocks. 4) All welded and constructively completed regions. 5) Vehicle - Equipment connection points (If equipment and vehicle assembly is performed by Orakçı Machinery staff)

Non Warranty Terms	1) Material damage (such as breakage, crushing, melting, rupture, tearing, burning, warping, etc.) caused by not following the assembly instructions of the product D or performing assembly by unqualified personnel. 2) In electrical and / or hydraulic systems; intervention to factory settings 3) From the receipt of the parts shipped for the product by the customer; Failure to report missing, defective, defective / damaged parts within 15 days	1) Material damage (such as breakage, crushing, melting, rupture, tearing, burning, warping, etc.) caused by not following the M assembly instructions of the product or performing assembly by unqualified personnel. 2) In electrical and / or hydraulic systems; intervention to factory settings 3) From the receipt of the parts shipped with the product / product by the customer; Failure to report missing, defective, defective / damaged parts within 15 days 4) Installation by non-authorized1 persons 5) Usage and Maintenance Guide not available next to the product 6) As stated in the Operation and Maintenance Guide, periodic and preventive maintenance operations are not carried out according to the instructions and on time 7) Use of non-original spare parts “External spare parts list” 8) Repair or maintenance of non-authorized1 persons 9) Use of equipment or	1) Material damage (such as breakage, crushing, melting, rupture, tearing, burning, skew, etc.) caused by not following the F assembly instructions of the product or performing assembly by unqualified personnel. 2) In electrical and / or hydraulic systems; intervention to factory settings 3) From the receipt of the parts shipped with the product / product by the customer; Failure to report missing, defective, defective / damaged parts within 15 days 4) Installation by non-authorized1 persons 5) Usage and Maintenance Guide not available next to the product 6) As stated in the Operation and Maintenance Guide, periodic and preventive maintenance operations are not carried out according to the instructions and on time 7) Use of non-original spare parts “External spare parts list” 8) Repair or maintenance of non-authorized1 persons 9) Use of equipment or system outside of its intended purpose or other than those specified in the manual. 10) The carrier vehicle on which the equipment is mounted is not covered by the Orakçı Machinery Warranty Coverage.

KONTROLSUZ KOPYA

		system beyond its intended purpose or other than those specified in the manual.	

Table 44 : Warranty table

Authorized conditions; Authorized service conditions between Orakçı Machinery and the Customer

Customer provision with Orakçı Machinery according to contract terms

	D	M	F
Service employee (Provider; customer)	Electrician Hydraulic Technician Welding-Installation Personnel Painter	Electrician Hydraulic Technician Welding-Installation Personnel	Electrician Hydraulic Technician Welding-Installation Personnel
Document (Provider; Orakçı Machinery-Implementer; customer)	D- Training Kit D- Project Installation Instruction D- Control Form Examples D- Spare Parts List D- Service Management Process Flow	M- Training Kit M- Project Installation Instruction M- Control Form Examples M- Spare Parts List M- Service Management Process Flow	F- Training Kit F- Project Installation Instruction F- Control Form Examples F- Spare Parts List F- Service Management Process Flow

Table 45: Service terms table

KONTROLSUZ KOPYA

D- Training Kit
D- Manuals (Process, Assembly, User, Maintenance)
D- Spare Part List

D-After Sales Flow Chart

8.1 General Storage Conditions:

It is mandatory to act in accordance with the product maintenance manual and product maintenance conditions.
If the valves are not installed in the system, they should be kept in the status of dispatch and protection before assembly.
Malfunctions resulting from impacts applied on the body of the valve are not covered by the warranty.
Changing the pressure values set by the reaper is out of warranty.
Not covered by Orakçı's knowledge, it is out of warranty as a result of interventions on the product.
.

- **8.1.1 Storage Conditions of Electronic Components**:
- Electronic components have a sensitive structure.
- • Electronic components must be protected from contact and impact.

- • Electronic components should not come into contact with water. Humidity should be avoided in their environment.
- • It should not be exposed to sunlight directly for long periods of time.
- • There should be no structures with high magnetic field strength around it.
- • Electronic components should be kept in the original boxes as shipped.
- • Care should be taken that the environment in which they are kept is not dusty.
- • Electronic components should not be stacked on top of each other.
- • Contact with risky objects should be avoided.

- **8.1.2 Storage Conditions of Hydraulic Pistons and Hydraulic Seals:**

- • The ideal ambient temperature in the storage conditions of the seals should be room temperature.
- • The felt temperature should be around 20-25 ° C before installation. In addition, it should not be affected directly at heat sources.
- • Dirt can change the mechanical properties of hydraulic seals. Therefore, it is absolutely necessary to remove dirt before assembly and during storage.
- • Felts should be avoided especially during storage. It is necessary to force the rubber parts during storage, to avoid compression. The strains change the mechanical properties.
- • Seals should not come into contact with solvents, oils and other fluids during storage.
- • Hydraulic pistons should not be deformed.
- • Care must be taken that the steps of the hydraulic pistons are not open during storage.
- • In the cylinder, dirt, rust, etc. that will prevent piston movement. should not be.
- • Hydraulic pistons should not be in corrosive, oxidizing environments.
- • Hydraulic pistons paint, priming etc. their stages should be closed in operations.
- • Hydraulic pistons must not be damaged during their transportation and their stages must be transported closed.

KONTROLSUZ KOPYA

- • Shipped felts and pistons should be stored under appropriate storage conditions. Otherwise, it will be out of warranty.

Products sent by Orakci Machinery within the scope of warranty:

1) Directional Control Valve (Joystick)

2) Mechanical Limit Switch

3) Discharge Block (Poppet / Electric)

4) Hydraulic Records

5) Hydraulic Hoses

6) Siemens LOGO! module

7) Electronic Switches and Buttons

8) Electric Relays

9) Hydraulic Pistons

10) Hydraulic Sealing Elements (Piston Seals, O-rings)

KONTROLSUZ KOPYA

9.Additional Documents

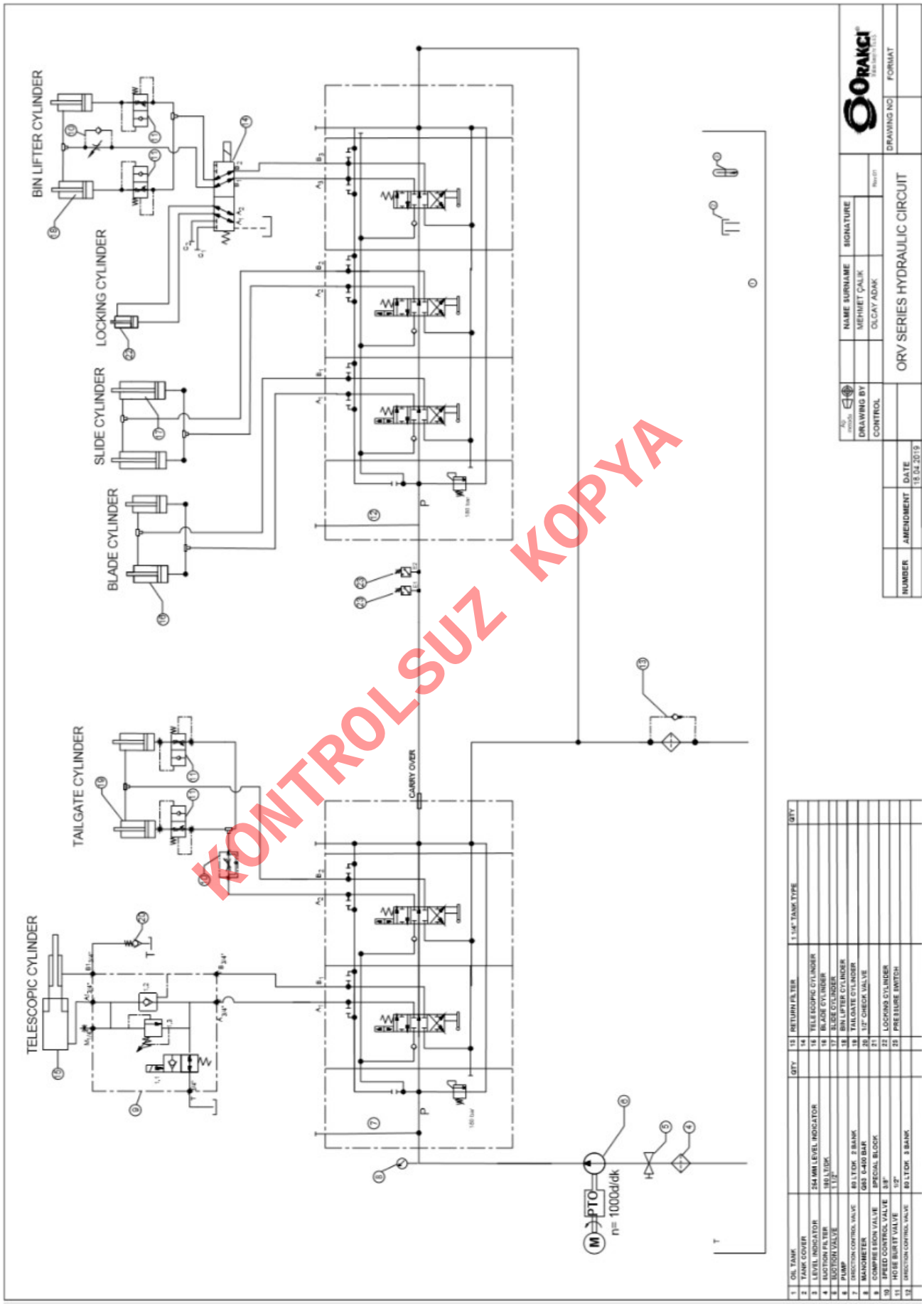
BIN LIFTER CYLINDER
LOCKING CYLINDER
SLIDE CYLINDER
BLADE CYLINDER
TAILGATE CYLINDER
TELESCOPIC CYLINDER
CARRY OVER
PTO
n= 1000d/dk
KONTROLSUZ KOPYA
ORV SERIES HYDRAULIC CIRCUIT
NAME SURNAME
SIGNATURE
MEHMET ÇALIK
OLCAY ADAK
DRAWING BY
CONTROL
DRAWING NO
FORMAT
NUMBER
AMENDMENT
DATE
18.04.2019

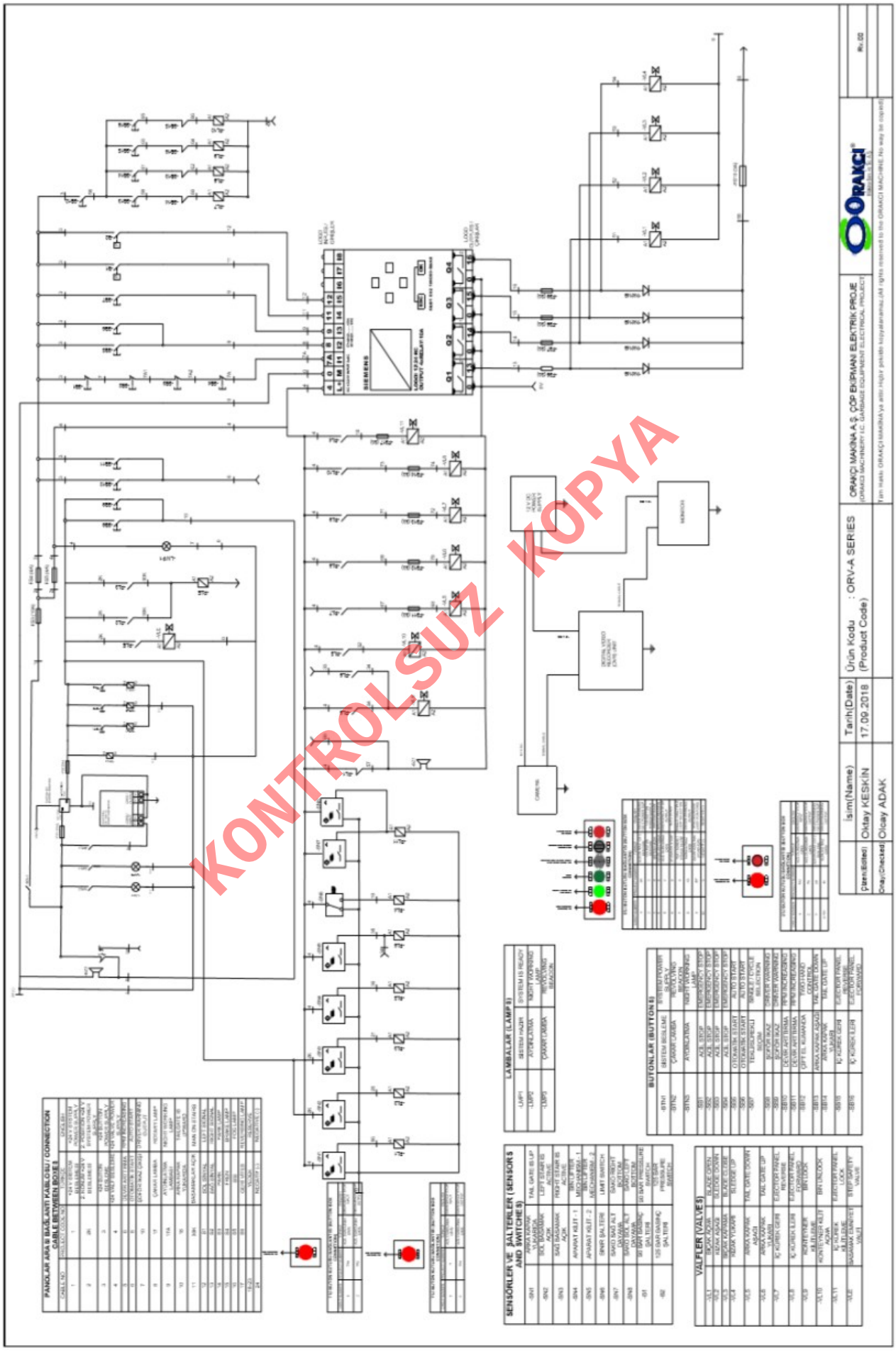
KONTROLSUZ KOPYA
ORAKÇI MAKİNA A.Ş. ÇÖP EKİPMANI ELEKTRİK PROJE
(ORAKÇI MACHINERY I.C. GARBAGE EQUIPMENT ELECTRICAL PROJECT)
Ürün Kodu : ORV-A SERIES
(Product Code)
Tarih(Date)
17.09.2018
İsim(Name)
Oktay KESKİN
Olcay ADAK
Çizen(Edited)
Okay(Checked)
Rv.00
SIEMENS
LAMBALAR (LAMP 8)
BUTONLAR (BUTTON 8)
SENSÖRLER VE ŞALTERLER (SENSORS AND SWITCHES)
VALFLER (VALVES)
PANOLAR ARA BİBAĞLANTI KABLOSU / CONNECTION CABLE BETWEEN BOXES

KONTROLSUZ KOPYA

Orakçı İş Merkezi No:12, PK: 16120
Nilüfer BURSA / TÜRKİYE
T : +90 (224) 441 81 11
F : +90 (224) 443 52 56
E : bilgi@orakci.com

Kahraman Sokak No:52, PK: 16335
Osmangazi Bursa / TÜRKİYE
T : +90 (224) 493 24 98 / 1200,1201
F : +90 (224) 493 24 99
E : export@orakcimakina.com

Kahraman Sokak No:52, PK: 16335
Osmangazi Bursa / TÜRKİYE
T : +90 (224) 493 24 98
F : +90 (224) 493 24 99
E : info@orakcimakina.com

www.orakcimakina.com