OBW Series

HYDRAULIC REFUSE COMPACTORS

ORAKÇI
Machinery Industry Co.

1. Equipment Dimensions List

	Letter Code	10 m³	11 m³	12 m³	13 m³	14 m³	15 m³	16 m³	17 m³	18 m³	19 m³	20 m³	21 m³	22 m³	23 m³	24 m³	25 m³	26 m³	27 m³
Rear Overhang	*C	2780																	
Chassis Height	*CH	1000																	
Distance Between Ejection Plate - Body	L	1767	1992	2217	2442	2667	2892	3117	3342	3567	3792	4017	4242	4467	4692	4917	5142	5367	5592
Body Height	*E	3520																	
Useful Chassis Length	*Ca	2970	3195	3420	3645	3870	4095	4320	4545	4770	4995	5220	5445	5670	5895	6120	6345	6570	6795
Truck Chassis Width	*CW	May differ by truck.																	
Distance Between Chassis - Cabin	*F	268																	
Body Internal Width	J1	2130																	
Body External Width	J2	2136																	
Chassis Back Length	P	1120																	
Distance Between Cabin - Equipment	*S	475																	
Body Length	G	3133	3358	3583	3796	4021	4246	4471	4696	4921	5146	5371	5596	5821	6046	6271	6496	6721	6946
Body Internal Height	H	2120																	
Tailgate Length	K	1936																	
Hopper Extension Height	M	1440																	
Water Tank Length	**R	366																	
Tailgate Ground Clearance	*TH	334																	
Equipment Weight (kg)(±3%)	-	***Please contact ORAKÇI MAKİNA for equipment weight.																	

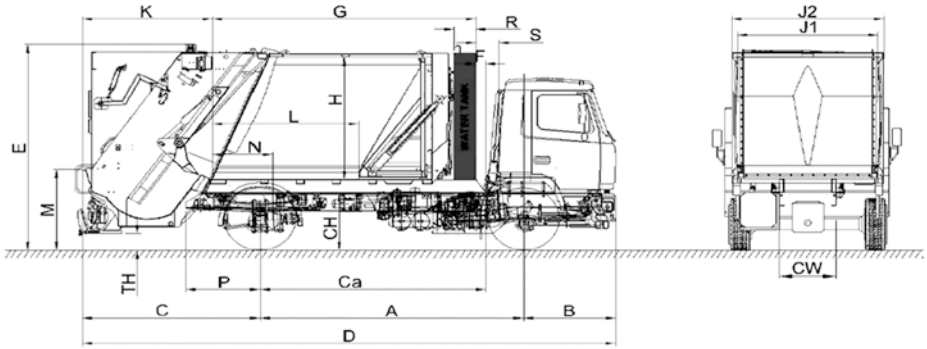

- *The dimensions are given in mm.*
- *Parts marked with (*) may differ by truck. The final dimensions will be concluded following the sketch study on the truck chosen by the customer. The table has been made for information purposes.*
- *Parts marked with (**) means that the dimensions may change in case a bigger or smaller clean and waste water tank is requested.*
- *These are the base equipment data and they do not include optional equipment or accessories.*
- *The equipment dimensions may vary by ±3% depending on the general tolerances.*

2. Body Capacity

Capacity	10 m³ - 27 m³

OBW SERIES TAILGATE FEATURES		
Capacity	Without Hopper Extension	1.5 m³
	With Hopper Extension (Optional)	2 m³
Loading Height	Without Hopper Extension	1020 mm
	With Hopper Extension (Optional)	1440 mm

3. Hydraulic Features

Pump	Pump Types	Gear Pump
		Vane Pump (Optional)
		Piston Pump (Optional)
		Tandem Pump (Optional)
	Operating Pressure	180 bar
	OBW SERIES	
	Pump Flow Rate	82 lt/dk.
		** Pump values may differ depending on motor output speed. Motor output speed Max. 1000rpm*
Oil Tank	OBW SERIES	
	Capacity	160-200 lt
	Suction Filter	125 µc
	Return Filter	25 µc

(*) Pump may differ by motor output speed. The maximum value for motor output speed is 1000rpm.

(**) Pump flow rate has been given for 1 piece of equipment, this value may differ depending on the number of pump head being 1 or 2.

4. Clean Water - Waste Water Line System

OBW Washing System Features		
Pump	Pump	Piston
	Operating Pressure	100 - 150 bar
	Hydraulic Pump Flow Rate	45 – 100 lt / min.
	Rotary Pump Head Rate	50 lt / min.
OBW Waste Water Transfer System Features		
Pump		Open-Vane Stainless Pump
Filter System		Filter System Capable of Filtrating Solid Particles
Tank Capacities		
Clean Water Tank		1000 – 3000 lt
Waste Water Tank		650 – 2000 lt
Trigger Pump Head Drum		15 m – 20 m

5. General Features

Compaction Ratio	1 : 6
Washing Time	4 – 15 sn
Container's Compliance With Standards	EN 840
Operating Voltage	12V – 24V

6. Materials Used

Material	**Container Bottom**	**Container Top**	**Blade Bottom Sheet**
	S355J2C+N	S355J2C+N	Hardox 450
	Hardox 450 (Optional)	Hardox 450 (Optional)	
	Tailgate Tank	**Tailgate Side Wall**	**Slide Bottom Sheet**
	Hardox 450	S355J2C+N	S355J2C+N
		Hardox 450 (Partial)	Hardox 450 (Optional)

We offer Hardox 450 as an option for extending the useful life of the equipment located in the parts exposed to corrosion.

7. Bin Lifter Systems

Bin Lifter (Optional)	• 120 lt - 1100 lt (EN 840) • 120 lt - 1700 lt (EN 840) • 400lt - 800lt (TR)

We produce systems whose EN 840 standard-compliant bin lifter is suitable for lifting plastic and metal containers.

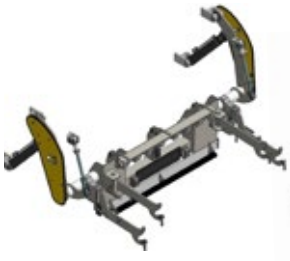

8. Optional Features

Hydraulic Control System	- Manual - Semi-automatic - Automatic	**Hardox**		**Equipment Control Directions**	Right / Left
Bin Lid Opener	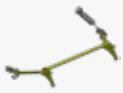	**Bin Stopper**		**Electrical Control System**	• PLC • ECU • ECU-CANBUS
EN 1501 : *Refuse collection vehicles - General requirements and safety requirements*		**Steps (EN 1501)**		**Step Sensor**	
Waste Water Tank		**Ladder**		**Inner Cabin Control**	
Worker Safety Barriers EN 1501		**Fire Extinguisher Box**		**Side Marker Lights**	
Mud Guards		**Under Run Cover EN 1501**		**Camera**	
Bin Lifter		**Body Lighting**		**Button Type**	
		Tailgate Hopper			

Please contact ORAKÇI MAKİNA for optional requests.

9. Truck Warning Alarm System

Manual	Semi-automatic	Automatic
Beacon Light	Beacon Light	Beacon Light
Tank Lighting Lamps	Tank Lighting Lamps	Tank Lighting Lamps
Stop Lamps	Stop Lamps	Stop Lamps
Driver Warning	Driver Warning	Driver Warning
Side Marker Light (Optional)	Side Marker Light (Optional)	Side Marker Light (Optional)
Safety Sensor Between Tailgate - Ejection Plate	Safety Sensor Between Tailgate - Ejection Plate	Reversing Buzzer
		Step Sensor (Optional)
		30 km/h Speed Limiter Signal
		Camera System (Optional)
		Inner Tank Recovery Buttons
		Outer Tank Stop Buttons
		Safety Sensor Between Tailgate - Ejection Plate
		Two-Hand Control Button
		Full Container Sensor (Optional)
		Tailgate Hopper Sensor

10. The opportunity of washing the containers between 120 and 1100 liters in 4 - 15 seconds is offered.

11. 2 m^3 tailgate volume.

12. A hydraulically driven, stainless body wastewater pump that transfers the dirty water accumulated in the tailgate waste water tank to the external waste water tank is in place.

13. The control systems of our equipment are programmed by our company and improvements can be made in line with demands.

14. 1:6 compaction ratio is available (may differ by waste density).

15. The movement of the rotating washing head in the waste container is provided by hydraulic (optional) or pneumatic pistons.

16. Bin lifter suitable for containers in compliance with EN840 standards is in place.

17. CANBUS support is offered, if requested, for trucks with Inner Cabin Control System.

18. The control systems of our equipment are programmed by our company and improvements can be made in line with potential requests.

19. The equipment is made in line with EN 1501 standards.

20. Language options according to countries are available on the screen and labels (optional).

21. It is possible to read equipment operating information (vehicle and PTO operating time counter, vehicle speed and temperature information, equipment occupancy and oil temperature information) from inside the cabin.

22. A talking system between operator and driver is available (optional).

23. 1-year product warranty and 10-year spare parts supply guarantee is provided.

24. Packer and bin lifter systems are able to operate simultaneously (Tandem Pump) (optional).

ORAKÇI
Machinery Industry Co.

KALİTE BELGELERİMİZ
QUALITY CERTIFICATES

- **DIN EN ISO-9001: 2015**
- **DIN EN ISO-14001: 2015**
- **EN 1501-1: 2011 + A1: 2015**

MERKEZ OFİS / *HEAD OFFICE*
SATIŞ DEPARTMANI / *SALES DPT.*
Üçevler Mh. Tanay Cad. Esra Sokak
Orakçı İş Merkezi No:12, PK: 16120
Nilüfer BURSA / TÜRKİYE
T : +90 (224) 441 81 11
F : +90 (224) 443 52 56
E : bilgi@orakci.com

FABRİKA / *FACTORY*
Ovaakça Santral Mah.
Kahraman Sokak No:52, PK: 16335
Osmangazi Bursa / TÜRKİYE
T : +90 (224) 493 24 98
F : +90 (224) 493 24 99
E : info@orakcimakina.com

www.orakcimakina.com

ORAKÇI Group of Companies